Quant.	Unit	Form	Description
OT room			
1	1	pce.	Table, operating, 5-section, hydraulically adjustable, 30º Trendelenburg/anti-Trendelenburg (ROT-160)
1	1	pce.	Instrument stand, Mayo, with tray (dim. 60 x 40 cm), height adjustable 75-110 cm, stainless steel
1	1	pce.	kickbucket, stainless steel, on castors
1	1	pce.	waste bin, stainless steel outer, plastic inner, 14 litres, with foot lever raising lid
1	1	pce.	container, polypropylene, 100 litres, with lid
1	1	pce.	I.V. stand, 4 hooks, on castors, stainless steel
1	1	pce.	patient monitor, 12" color display , 7-l.ECG/HR/SpO2/PR/NIBP/RESP/EtCO2, 220V/battery (PMS8000C)
1	1	pce.	wall mounting stand, for PMS8000C patient monitor
2	1	pce.	trolley, instruments, with 3 shelves, dim. 75 x 50 x 112 cm, on castors, stainless steel
RECOVERY			
2	1	pce.	trolley, patients, height & Trendelenburg adjust., siderails, IV pole, dim 190x65x45/75 cm
2	1	pce.	mattress for patient stretcher, foam density 30 kg/m², waterproof removable washable cover, 185 (117+68) x 65 x 10 cm
6	1	pcs.	pillow cover
2	1	pce.	pillow, 100 % polyester, synthetic filling, 60 x 70 cm
12	1	pce.	bed sheet, 100 % cotton, white, 120 x 200 cm
6	1	pce.	blanket, 100 % cotton, 380 g/m2, 120 x 200 cm
1	1	pce.	stretcher, folding, aluminium, reinfor. washable nylon sheet, dim. 203x50x14 cm (folded 96x50x17 cm)

Quant.	Unit	Form	Description
1	1	pce.	bassinet (baby's cot), plexiglass, with mattress, s/s trolley on castors, dim. 80 x 46 x 86 cm
1	1	pce.	waste bin, stainless steel outer, plastic inner, 14 litres, with foot lever raising lid
1	1	pce.	sphygmomanometer, anaeroid, 300 mm Hg, with adults cuff
1	1	pce.	patient monitor, 12" color display ,12-l.ECG/HR/SpO2/PR/NIBP/RESP/EtCO2, 220V/battery (PMS8000C)
1	1	pce.	wall mounting stand, for PMS8000C patient monitor
1	1	pce.	slide sheet, silicone coated, 90 x 110 cm
CONSUMABLES			
Clothing			
8	100	pce.	gloves, examination, latex, size large, pre-powdered, disposable, non-sterile
25	100	pce.	gloves, examination, latex, size medium, pre-powdered, disposable, non-sterile
8	100	pce.	gloves, examination, latex, size small, pre-powdered, disposable, non-sterile
750	1	pair	gloves, surgical, latex, size 6.5, sterile
2500	1	pair	gloves, surgical, latex, size 7.5, sterile
750	1	pair	gloves, surgical, latex, size 8.5, sterile
8	1	pce.	coat (doctor's), long sleeve, 3 pockets, cotton, white, size L
8	1	pce.	coat (doctor's), long sleeve, 3 pockets, cotton, white, size M
8	1	pce.	coat (doctor's), long sleeve, 3 pockets, cotton, white, size S
20	1	pce.	theatre operating gown, cotton, sterilizable, size small
40	1	pce.	theatre operating gown, cotton, sterilisable, size medium

Quant.	Unit	Form	Description
20	1	pce.	theatre operating gown, cotton, sterilisable, size large
10	1	pce.	scrub set, unisex, 65/35 % polyester/cotton, V-neck top & pants, small
20	1	pce.	scrub set, unisex, 55/45 % polyester/cotton, V-neck top & pants, medium
10	1	pce.	scrub set, unisex, 55/45 % polyester/cotton, V-neck top & pants, large
60	100	pce.	face mask, disposable, 1 ply
30	100	pce.	cap, surgeon, disposable
1	65	pce.	drape, surgical, 50 x 60 cm, with fenestration, sterile
1	65	pce.	drape, utility, 45 x 75 cm, with fenestration, adhesive, sterile
20	1	pce.	drapes, surgical, 100 x 150 cm, woven polyester/cotton, 175g/m²
Kits & Equipment			
2	1	pce.	vacuum aspiration kit, double valve syr., 2cc silicon, flex. cannula (4-10 mm + 12 mm) + accessoires
2	1	pce.	kit, surgical instruments, for examination/suturing cervical & vaginal tears, UNICEF (9910006)
8	1	pce.	kit, surgical instruments, delivery, UNICEF (9910003)
2	1	pce.	kit, surgical instruments, curettage, UNICEF (9910002)
2	1	pce.	kit, midwifery, 2-equipment, UNICEF (9902218)
6	1	pce.	kit, surgical instruments, basic surgery, UNICEF (9910001)
20	1	pce.	kit, surgical instruments, suture, UNICEF (9910004)
20	1	pce.	kit, surgical instruments, dressing, UNICEF (9910005)
5	1	pce.	kit, caesarean section instruments
20	1	pce.	forceps, tissue, Duval, 23 cm, 20 mm fenestrated jaws
1	1	pce.	weighing scale, baby, with sliding weight, 16 kg/5 gram (Seca 725)

Quant.	Unit	Form	Description
1	1	pce.	doppler apparatus, pockettype, LCD display, FHR display, interchangeable 2 Mhz probe (Sonoline B)
1	1	pce.	electrosurgical unit, 300W, 220V, mono/bipolar, with reusable handpiece & accessories (Diatrom 300)
6	1	pce.	forceps, bipolar, straight , 15 cm, for electrosurgical unit (8310120)
2	1	pce.	forceps, bipolar, angled , 15 cm, for electrosurgical unit (8310122)
8	1	pce.	diathermy/electrosurgery active cable, bipolar, for electrosurgical unit (8190120)
1	1	pce.	adaptor, for bipolar cable for electrosurgical cable (00498.04)
1	1	pce.	Defibrillator Reanibex 700, with printer
10	1	Rol.	Printer paper for Reanibex 700
1	1	pce.	vacuum extractor, Bird, complete (incl. spare bottle)
5	1	pce.	cup for vacuumextractor 50 mm
1	1	pce.	decapitation hook, Braun, 31 cm
1	1	pce.	wire with saw teeth, Gigli, 50 cm
1	1	pce.	handles for wire saw, Gigli
1	1	pce.	pump, aspirating, 230 V/50 Hz, capacity 70 lt./min., 2 x 2 liter bottles
1	1	pce.	pump, aspirating, portable, 230V/50-60 Hz, capacity 23 lt./min., max. vacuum 750 mm Hg, 2 litres bottle
Anesthesia consumables			
100	1	pce.	endotracheal tube with cuff, 8 mm, disposable
100	1	pce	endotracheal tube with cuff, 7.5 mm, disposable
100	1	pce.	endotracheal tube with cuff, 7 mm, disposable
100	1	pce.	endotracheal tube with cuff, 6.5 mm, disposable
100	1	pce.	endotracheal tube with cuff, 6 mm, disposable

Quant.	Unit	Form	Description
100	1	pcs.	endotracheal tube with cuff, 5.5 mm, disposable
100	1	pce.	endotracheal tube with cuff, 5 mm, disposable
100	1	pce.	endotracheal tube with cuff, 4.5 mm, disposable
100	1	pce.	endotracheal tube without cuff, 4 mm, disposable
100	1	pce.	endotracheal tube without cuff, 3.5 mm, disposable
100	1	pce.	endotracheal tube without cuff, 3 mm, disposable
1	1	pce	laryngoscope, McIntosh, with 4 blades (no. 1, 2, 3 & 4)
1	50	pce.	mask, oxygen, non-rebreathing, adult size, with bag, checkvalve, safety vent, 210 cm tubing
1	50	pce.	mask, oxygen, non-rebreathing, child size, with bag, checkvalve, safety vent, 210 cm tubing
15	50	pce.	tube, oxygen, nasal, CH 10, disposable
5	1	pce.	resuscitation bag, ambu-type, adult, black rubber, with mask
5	1	pce.	resuscitation bag, ambu-type, child, black rubber, with mask
5	1	pce.	resuscitation bag, ambu-type, infant, black rubber, with mask
Suture consumables			
88	12	pcs.	nylon monofilament 2-0, 75 cm, with needle
147	12	pcs.	nylon monofilament 3-0, 75 cm, with needle
108	12	pcs.	nylon monofilament 4-0, 75 cm, with needle
34	12	pcs.	nylon monofilament 5-0, 75 cm, with needle
50	12	pcs	synthetic suture, absorbable (polyglycolic acid) 0-0, 70 cm, with needle
50	12	pcs.	synthetic suture, absorbable (polyglycolic acid) 2-0, 70 cm, with needle
50	12	pcs.	synthetic suture, absorbable (polyglycolic acid) 3-0, 75 cm, with needle

Quant.	Unit	Form	Description
17	12	pcs.	synthetic suture, absorbable (polyglycolic acid) 4-0, 75 cm, with needle
Other items			
2	1	pcs	Crash cart - empty
3	1	pcs.	Vital sign monitor Mindray
8	1	Pcs.	Temperature probe MP2 patient monitor
1	1	pce.	Medicine cart
1	1	pce.	ECG Machine Mindray
Miscellaneous			
10	100	pcs	bed sheet, incontinence, 60 x 60 cm, 12 layers, absorbent capacity 320 ml (Hartmann Molinea)
2100	1	pcs.	infusion giving set, with airrelease and needle, 21 G x 1.5" (0.80 x 40 mm) (for bags/bottles)
500	1	pcs.	catheter, I.V., with wings and injection port, 18 G x 1.3" (green)

Annex: Inventory tents – 50 bed

FOR IDENTIFIERS: See packing lists

Quant.	Unit	Form	Description
50	1	pce.	Bed, hospital, collapsible/portable, dimensions 201 x 70.5 x 43 cm, steel framenwith orange 600D polyester mat, in carrying bag (Disc Bunk 19803)
50	1	pce.	Extension set, legs, set of 4, anti rust, powder coated, silver, for Disc Bed 19803.
10	1	pce.	Trolley, instruments, 2 shelves, 720 x 460 x 900 mm, stainless steel, with 12.7 cm (5") castors, collapsible (knock down construction)
1	1	pce.	medicine cart, 606 x 450 x 1015 mm, aluminium/ABS, with 12.7 cm (5") castors
25	1	pce.	I.V. stand
120	1	pce.	basin, solution, approx. 6000 ml, diameter 30 x 9 cm, stainless steel, stock
15	1	pce.	bedpan, adult size, autoclavable, polypropylene
1	60	pce.	urinal for men, 1000 ml, autoclavable, polypropylene
25	1	pce.	plastic wire coated urinal holder
120	1	pce.	blanket, 100 % cotton, 380 g/m2, 120 x 200 cm
240	1	pce.	bed sheet, 100 % cotton, white, 120 x 200 cm
120	1	pce.	pillow, 100 % polyester, synthetic filling, 60 x 70 cm
240	1	pce.	pillow cover
2	1	pce.	table, examination, folding, 3Psection, with washable pad, dimensions 173 x 61 x 73 cm, in carrying bag
1	1	pce.	diagnostic set (otoP/ophthalmoscope) (Heine Mini 3000)

Quant.	Unit	Form	Description
Sterilization room			
2	1	pce.	Melag Vacuklav 43B+ 4 22 Litres table top sterilizer
12	1	pce.	Tray (42 x 19) for Melag mount C (00230)
12	1	Pce.	Melag standard tray cassette (00286)
2	1	pce.	Melag Meladest 65 (0,6 L demi water per hour)
16	250	pcs.	Sterilization paper, 90 x 90 cm
48	1	pce.	Autoclave tape, 19 mm x 50 m
1	1	pce.	trolley, instruments, with 3 shelves, dim. 75 x 50 x 112 cm, on castors, stainless steel

Mount >C< for 6 trays

Annex: Non-med and non-fluid IEH Kit

FOR IDENTIFIERS: See packing lists

Quant.	Unit	Form	Description
Supply Equipment			
2	1	pce.	apron, surgical, plastic, heavy duty
2	1	pce.	sheeting, plastic, 90 x 140 cm (washable)
2	1	pce.	nailbrush, surgical, resterilizable, nylon
2	1	pce.	handtowel 45 x 45 cm, 70 gram
4	1	pce.	stethoscope, binaural, standard, dual head
4	1	pce.	sphygmomanometer, anaeroid, 300 mm Hg, with adults cuff
1	1	pce.	stethoscope, foetal, Pinard, aluminium
2	1	pce.	otoscope set (incl. bulb and 3 specula)
2	1	pce.	spare bulb for otoscope
12	1	pce.	battery, for otoscope set (1.5 V, 49 x 26 mm, type C/R14/UM2)
1	1	pce.	weighing scale, adults, bathroom-type, 150 kg/100 g, electronic, with batteries
3	1	pce.	weighing scale, baby, hanging model without trousers, 25 kg/100 gram
15	1	pair	trousers for baby weighing scale 25 kg/100 gram (hanging model)
2	1	pce.	razor, safety, all metal, 3-piece
5	1	pce.	tape measure, 150 cm
50	1	pce.	insertion tape for measuring arm circumference
2	1	pce.	tourniquet, rubber
10	1	pce.	thermometer, electronic, digital display
1	1	pce.	sterilizer, pressure cooker, 20.9 litres
1	1	pce.	basket for pressure cooker 20.9 litres
1	1	pce.	stove, single burner type, kerosene
1	1	pce.	timer, 60 minutes, with alarm
2	1	pce.	kidney basin, 25 cm, 825 ml, stainless steel
2	1	pce.	cup, solution, 180 ml, stainless steel
2	1	pce.	sterilising drum, diameter 150 mm, stainless steel (Schimmelbush)
2	1	pce.	forceps, haemostatic, Kocher, 1x2 teeth, straight, 14 cm
2	1	pair	scissors, surgical, straight, 14 cm, s/b
1	1	pce.	tray, dressing, 300 x 200 x 20 mm, without lid, stainless steel
2	1	pce.	forceps, haemostatic, Halsted-Mosquito, curved, 12.5 cm
2	1	pce.	forceps, haemostatic, Kocher, 1x2 teeth, straight, 14 cm
2	1	pce.	forceps, tissue, spring-type, 1 x 2 teeth, 14.5 cm
2	1	pcs.	needle holder, Mayo-Hegar, straight, narrow jaw, 18 cm
2	1	pce.	probe, round point & tongue-tie, 14.5 cm
2	1	pce.	handle for surgical blades, no. 4 (major surgery)
2	1	pair	scissors, surgical, curved, 14 cm, s/b
2	1	pce.	tray, instrument, 225 x 150 x 45 mm, with lid, stainless steel
5	1	pce.	forceps, haemostatic, Kocher, 1x2 teeth, straight, 14 cm

5	1	pce.	forceps, dressing, spring-type, 16 cm
5	1	pair	scissors, surgical, straight, 14 cm, s/b
5	1	pce.	tray, instrument, 225 x 150 x 45 mm, with lid, stainless steel
1	1	pair	scissors, dissecting, Mayo, curved, 14.5 cm, b/b
1	1	pair	scissors, uterine, Sims, curved, 20 cm
1	1	pce.	forceps, haemostatic, Kocher, 1x2 teeth, straight, 14 cm
1	1	pce.	tray, instrument, 225 x 150 x 45 mm, with lid, stainless steel
3	1	pce.	water filter, polished stainless steel, with 4 candles, 2.5 litres/hour
Supply Renewables			
2	50	pcs.	catheter, I.V., with wings and injection port, 18 G x 1.75" (green)
1	50	pcs.	catheter, I.V., with wings and injection port, 22 G x 1" (blue)
1	50	pcs.	catheter, I.V., with wings and injection port, 24 G x 3/4" (yellow)
20	100	pcs.	needle, hypodermic, Luer, 19 G x 1.5" (1.10 x 40 mm), disposable
15	100	pcs.	needle, hypodermic, Luer, 21 G x 1.5" (0.80 x 40 mm), disposable
15	100	pcs.	needle, hypodermic, Luer, 23 G x 1" (0.60 x 25 mm), disposable
1	100	pcs.	needle, hypodermic, Luer, 25 G x 5/8" (0.50 x 16 mm), disposable
1	100	pcs.	scalp vein infusion sets 21 G (0.80 mm)
3	100	pcs.	scalp vein infusion sets 25 G (0.50 mm)
1	25	pcs.	needle, spinal, for injection and lumbal punction, Quincke tip, 20 G x 3.5", disposable
1	25	pcs.	needle, spinal, for injection and lumbal punction, Quincke tip, 22 G x 1.5", disposable
1	100	pcs.	syringe, hypodermic, Luer, 2-part, 20 ml, disposable
6	100	pcs.	syringe, hypodermic, Luer, 2-part, 10 ml, disposable
20	100	pcs.	syringe, hypodermic, Luer, 2-part, 5 ml, disposable
7	100	pcs.	syringe, hypodermic, Luer, 2-part, 2 ml, disposable
2	100	pcs.	syringe, hypodermic, Luer, 3-part, 1 ml, disposable
50	1	pce.	(burn)box for used syringes and needles, 5 litres (polysafe)
10	1	pcs.	syringe, catheter tip, 50/60 ml, disposable
10	1	pcs.	syringe, hypodermic, Luer, excentric, 50 ml, disposable
10	1	pcs.	tube, feeding (nasogastric), CH 16, 125 cm, disposable, sterile
50	1	pcs.	tube, feeding (nasogastric), CH 8, 40 cm, disposable, sterile
20	1	pcs.	tube, feeding (nasogastric), CH 5, 40 cm, disposable, sterile
1	10	pcs.	catheter, Foley balloon, 2-way, 10 ml, CH 12, sterile
1	5	pcs.	catheter, Foley balloon, 2-way, 10 ml, CH 14, sterile
1	5	pcs.	catheter, Foley balloon, 2-way, 10 ml, CH 18, sterile
10	1	pcs.	urinal drainage bag, 2000 ml, 85 cm tube, with non-return valve and tap
1	100	pcs.	gloves, examination, latex, size large, disposable, non-sterile
1	100	pcs.	gloves, examination, latex, size medium, disposable, non-

			sterile
1	100	pcs.	gloves, examination, latex, size small, disposable, non-sterile
1	50	pair	gloves, surgical, latex, size 6.5, sterile
3	50	pair	gloves, surgical, latex, size 7.5, sterile
1	50	pair	gloves, surgical, latex, size 8.5, sterile
200	5	pcs.	gauze pads 10 x 10 cm, 12 ply, N17, sterile
3	1	roll	gauze, hydrophylic, 90 cm x 91 m, 12 x 8 mesh, hospital quality
20	5	pcs.	razors, double blades, disposable
1	100	pcs.	blades, surgical, no. 22, disposable, sterile
12	12	pcs.	synthetic suture, absorbable (polyglycolic acid) 3-0, 75 cm, 3/8 circle 26 mm cutting needle
4	1	roll	umbilical tape, 25 m x 3 mm
5	100	pcs.	tongue depressor, wood (disposable)
1	300	pcs	sterilization control spots, 121 °C/15 minutes
1	100	pcs.	sterilization control strips, 121 °C/15 minutes
1	1	roll	autoclave tape, 3/4" (19 mm) x 50 metres

Air cleaning

The air supply and filter unit consist of different pre-filters (G4, F7, Hepa), a ventilator and an active air cleaning unit.
The air cleaning unit substantially reduces odours, visible smoke in the air, and microbial populations on surfaces*, utilizing the patent pending ActivePure technology. ActivePure consists of a special UV light and photocatalyst target, creating an Advanced Oxidation Process containing several friendly oxidizers.

**Scientific tests have demonstrated the use of our air purifiers substantially reduce microbial populations on surfaces – including but not limited to Escherichia coli, Listeria monocytogenes, Streptococcus spp., Pseudonomas aeruginosa, Bacilus spp., Staphylococcus aureus, Candida albicans, and S. chartarum. At this point, product testing does not make a similar demonstration with respect to airborne microbials. These statements have not been evaluated by FDA. These products are not intended to diagnose, treat, cure or prevent any disease.*

Next page: Comparison Technology Summery of our clean air unit.

Evaluation of Ultra-Violet Photocatalytic Oxidation for HVAC Indoor Air Applications

Alfred T. Hodgson, Douglas P. Sullivan, and William J. Fisk

Indoor Environment Department, Environmental Energy Technologies Division, E.O. Lawrence Berkeley National Laboratory, Berkeley, CA, USA

September 30, 2005

HVAC (UVPCO) Comparison Technology Summary

	Ozone	UV Light		Catalyst Based			Radiant Catalytic Ionization
	Corona Discharge Ozone Systems	UV-C Germicidal Lamp	UV-C Ozone Lamps	UV-C Catalytic Oxidation Systems	Photohydroionization™ Systems	PHI Cell™	RCI™
Designed for HVAC Systems	Yes	Yes	Yes	Yes	No	Yes	Yes
Provides whole house air purification	Yes	No	Yes	No	Yes	Yes	Yes
Keeps mold from growing on AC coil	No	Yes	No	No	Yes	Yes	Yes
Reduces odors, VOC's, bacteria, viruses and mold throughout the house	No	No	No	No	Yes	Yes	Yes
Low initial cost	No	Yes	Yes	No	Yes	Yes	Yes
Low installation cost	No	No	No	No	Yes	Yes	Yes
Reduces microbials by over 90% throughout the house	No	No	No	No	Yes	Yes	Yes
Provides a broad range of disinfection	No	No	No	Yes	Yes	Yes	Yes
Low maintenance	No	No	No	No	Yes	Yes	Yes
Low power consumption	No	Yes	Yes	No	Yes	Yes	Yes
Meets Federal ozone safety guidelines	No	Yes	No	Yes	Yes	Yes	Yes
Has the broadest range of effectiveness	No	No	No	No	No	No	Yes
One unit will service an HVAC System	Yes	No	Yes	No	No	Yes	Yes
UV bulb is protected from breakage & mercury contamination	N/A	No	No	No	No	Yes	Yes
Has 2 year warranty 15,000 hour life	No	No	No	No	No	Yes	Yes
Provide point of source microbial reduction sneeze test	No	No	No	No	No	Yes	Yes
Particulate removal	No	No	No	No	No	No	Yes

Annex: Inflatable tent

TAG 4 Arches

TAG 5 arches: 5.60m wide x 9.95m long x 2.80m high
Design of these tents is the same, except for the length, including:

- Liner
- Shadow net
- Beds
- Table/chair
- AC/heater
- Electrical Inflator
- Light
- Power sockets

General description:

- The inflatable arches are attached to the tent cover
- The inflatable arches are made of double side PVC coated polyester (1100 g/m2), FR class 1.
- The inflatable arch diameter is 35 cm
- Operative working pressure: 0,30 bar
- Each arch is fitted with fitting points to hang up lightening, electric cables, insulation liner, partition liner etc.
- Each inflatable arch is self-supporting, which is important in the unlikely case of accidental deflation

- It is possible to change an inflatable arch without dismounting the tent
- The inflatable arches are equipped with overpressure valves in case of over – inflation
- Each valve is protected by a cover cap
- The tents have 2 gable doors as standard but can be fitted with 4 or 6 doors and each tent is fitted with windows on each side between every arch.
- Each window is composed of: mosquito net, transparent PVC panel and black out panel.
- Above each window a triangular ventilation opening is situated
- The canopy- and floor fabric are made of double side PVC coated polyester (750 g/m2), FR class 1 and B1 according to DIN 4102.
- The canopy fabric has a special black film inserted between the two external layers in order to reduce the penetration light and reflect sunrays.
- The fabric has been treated with anti-fungus and anti mould.
- Each tent end is equipped with a rectangular sliding door
- Each tent is fitted with 4 cable sleeves for the heating/air conditioning ducts and 1 sleeve in each gable for the electric wires.
- The tents can be connected by means of a universal corridor.
- Once inflated the tents are transportable thanks to the carrying handles. Therefore, the tents can be inflated centrally and repositioned afterwards
- Wind resistance is 100 Km/hr (the tent must be fixed to the ground and braced)
- Snow load resistance 20 kg/sq.mt.
- The erection of a 42 m² tent is approx. 4 minutes using 1-2 operators

Standard accessories:
The tents are supplied with the following equipment (included in the price):

- pegs
- guy ropes
- stiffening bars
- manual inflator (
- hammer
- pvc bags for carrying and storing tent and accessories
- repair kit for tent's maintenance
- technical manual for use, maintenance and repair in English in hard format and DVD

Packing: Each tent is packed in its proper PVC bag, accessories are also packed in PVC bags. The complete tent is shipped in one strong carton box with dimensions of 152 x 102 x 92 cm withstanding export packing.

Marking: Each carton box has outside marking of contains in English language and serial number of the tent.

Field Kitchen

General specifications:

- All terrain 1 axle trailer
- Weather protection with non-woven fabric
- Two double wall pressure cooking kettles of 150 liters
- Two pressure frying baking units of 50 and 78 liters
- Two 28 liters water heaters
- Four cooking burners
- 100% diesel fired (no electricity needed)
- Including cooking accessories
- Color: RAL 6031

Capacity

- 250 meals
- 600 simple dishes

Cooking methods

- Cooking
- Pressure cooking
- Boiling
- Stewing
- Braising
- Frying
- Pressure frying
- Baking

Cooking accessories

- Four GN-Container 1/1-190, perforated, stainless steel
- Four GN-Container 1/1-65, perforated, stainless steel
- One measuring stick
- One wide hand ladle
- One small hand ladle
- One Stirring spatula
- One ladle
- Two Hooks for GN-Container to lift the drop handles

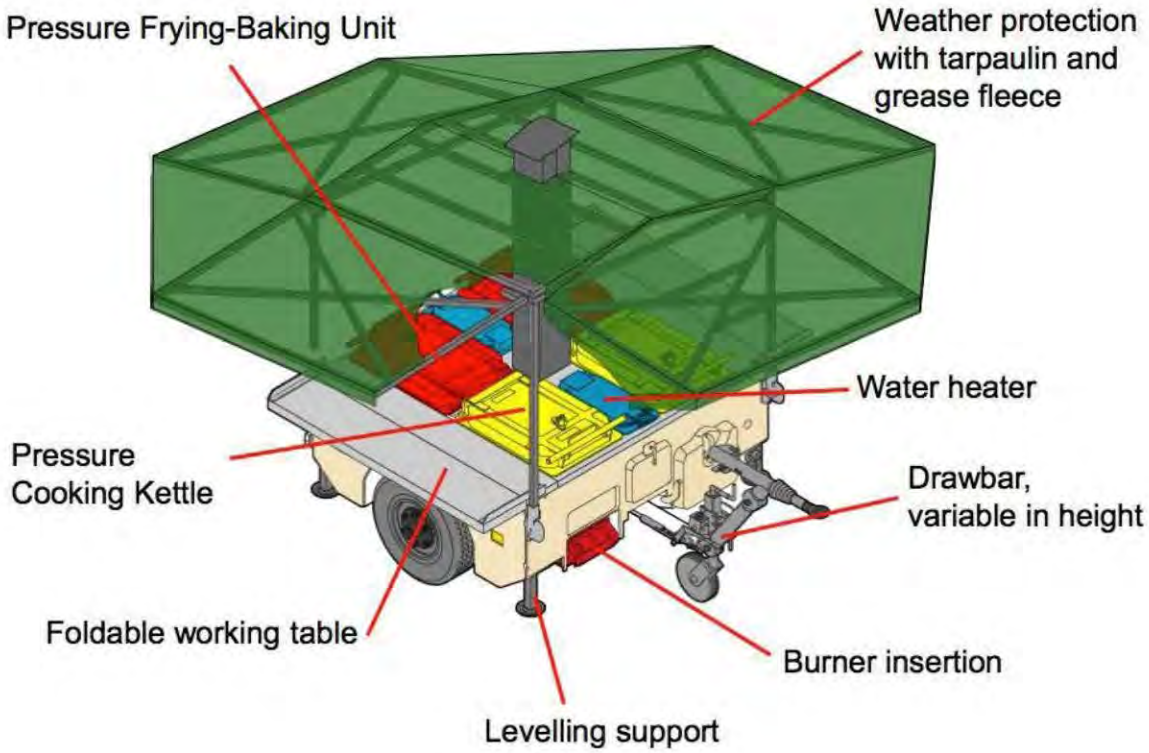

diamedica

the market leader in anaesthetic equipment for challenging environments

Glostavent®

Standard Anaesthesia System

The Glostavent® is the first anaesthetic machine that meets the WFSA Performance Standard for Anaesthetic Equipment for Low and Low-Middle Income (LMIC) Countries. It is a complete anaesthesia system designed to deliver safe inhalational anaesthesia in any difficult environment with or without electricity or compressed gases.

The integral mechanical ventilator makes the Glostavent® suitable to be used as an anaesthetic machine for either spontaneous breathing or ventilated patients. It can also be used as a ventilator in a recovery room or for longer ventilation in an Intensive Care Unit.

The Glostavent® is based on the principles of simplicity, economy and reliability:

- It will continue to function without interruption even if oxygen or electricity supplies fail
- On power failure the UPS internal battery will provide approximately 20 minutes reserve electricity. Following that the machine will change over automatically to the reserve oxygen cylinder or external oxygen source
- It is robust and able to withstand extremes of temperature and humidity, making it suitable for use in the most challenging of environments
- The system does not require nitrous oxide or soda lime and accidental delivery of a hypoxic mixture is impossible

The three principal components are: a versatile breathing system, a gas driven ventilator and an oxygen concentrator.

The workstation is made from anodised aluminium and is therefore rust-proof. It is mounted on four anti-static castors, two of which are fitted with brakes. It provides a platform for all other elements of the Glostavent® anaesthesia system.

AP VENTILATOR

- Adult and paediatric bellows as standard
- Normally driven by gas from oxygen concentrator with

- Complete anaesthesia system with mechanical ventilator
- Functions as either a drawover or continuous flow machine
- Will function without oxygen or without electrical power
- Can be used in intensive care as a ventilator or as an oxygen source for therapy
- Very low running costs
- Minimal maintenance required

Size: 54 x 66 x 145
Weight: 108 kg

- Gas use 1/7th patient's minute volume, a 600 litre cylinder will provide approx 10 hours running time in the event of electrical power failure
- Battery life in the absence of mains electricity >100 hours. Battery recharge to 90% within 3 hours
- Respiratory rate: up to 40 breaths/min.
- Tidal volume: 35-1000 ml
- Inspiratory/expiratory ratio: 1:2
- High pressure and low pressure alarms
- Inspiratory pressure range: 8-50 cm water
- Triggered breathing system

The ventilator is a time-cycled, volume limited, pressure generator. It consists of a set of gas driven bellows. The drive gas is oxygen at a pressure of 140 KPa supplied either by the concentrator or, in the event of an electricity failure, from the reserve oxygen cylinder or external oxygen source. After it has driven the ventilator it is collected and returned to the breathing circuit to supplement the inspired oxygen concentration, always providing the patient with a minimum of 35% oxygen.

THE OXYGEN CONCENTRATOR

- Up to 8 litres per minute oxygen at approx 95%
- Up to 8 litres per minute air
- Audible alarm on failure
- Low oxygen light, hours meter
- HEPA filters on both oxygen and air supply lines
- Power requirement 430 Watts
- Maintenance: regular washing of the external filter

VAPORISER

- Low resistance vaporiser suitable for drawover or continuous flow anaesthesia
- Calibrated for Halothane and Isoflurane, or Sevoflurane
- Scale 0 to 5%
- Capacity 150ml
- Weight 2.6Kg empty
- Stainless steel construction
- Minimal maintenance

U.P.S. S. (UNINTERRUPTIBLE POWER SUPPLY)

- 1000VA Double on-line UPS.
- Wide input voltage range 160-380Volts
- Frequency range 50Hz +/- 4%
- Circuit breaker protected
- Plug supplied to suit local standard
- The UPS provides a reserve supply of electricity for approximately 20 minutes. It also functions as a voltage and frequency regulator. Alarms on mains power failure, becomes insistent alarm as battery runs low
- If mains electricity is not restored at the end of 20 minutes the concentrator stops working and is turned off. The reserve oxygen cylinder then automatically takes over the supply of oxygen for the patient and the source of pressure to drive the ventilator. It requires no intervention by the anaesthetist

ADDITIONAL STANDARD ITEMS

- Adult and Paediatric circuits.
- Adult and Paediatric self inflating bags for manual ventilation
- Autoclavable drugs tray
- Oxygen Flush
- Reserve oxygen cylinder and 4 bar regulator
- 2 metre whip hose for alternative oxygen supply
- Active gas scavenger for removing exhaled gas from theatre (tubing supplied)
- Supplied in wooden packing case for maximum transport protection. Packed dimensions: 158 x 76 x 62cm, 178kg

Training and Support

Diamedica's commitment to our customers is:

- To provide, free of charge to all customers, ongoing after sales support via email or telephone for as long as the customer has their equipment
- To provide training for medical and technical personnel to enable them to maximise the potential of the equipment safely and economically

diamedica

the market leader in anaesthetic equipment for challenging environments

Quantity	Item No.	Product
1	AM2123	**Amadeo M5DRw 5 mobile X5ray system with PerkinElmer detector 14" x 17" CsI screen (XRpad 4336) wireless**  Mobile X-ray system for use in human medicine, for the whole body including abdomen and chest (CE declaration of conformity in accordance with Directive 93/42/EEC) Scope of supply • Portable monoblock X-ray unit based on high frequency technology • X-ray stand on wheels • 2-stage hand trigger switch Specification • Max. power requirement 6.0 kW • kV range in 2 kV steps: 40 to 120 kV • mAs range 0,4 - 143 mA • Focus 1.2 x 1.2 mm • Power 210 - 260 V (automatic power adjustment) • Collimator with high brightness and integrated timer • Dual laser pointer • 24 month standard warranty Direct radiography flat panel detector (DR) • PerkinElmer XRpad 4336 detector • Portable wireless detector based on amorphous silicon (a-Si) with caesium iodide (CsI) scintillator • Active area 35,5 x 43,0 cm (13,9" x 16,9") • Pixel pitch 100 µm • Resolution 3,556 (h) x 4,320 pixels (v) (15 million pixels) • Resolution approx. 5.0 lp/mm • Dynamic range (DQE) >75% • A/D conversion 16 bit • Charging time approx. 3 hours • Wireless LAN (802.11n WiFi compliant) • Dimension 38.4 x 46 x 1.5 cm (18.1" x 15.1" x 0.6") (WxHxD) (ISO 4090) • Weight 3.8 kg (8.4 lbs.) • 24 months standard warranty, 12 months on battery Amadeo acquisition console • *dicomPACS*® 19" Amadeo M-DR Touchscreen Workstation AllInOne-PC, CPU Intel® 2,1 GHz, 8 GB RAM, 256 GB SSD hard drive, 2x 1000 Mbit network card, WLAN, Windows 7 (English) 19" Touchscreen display 1280x1024 pixel • 24 month standard warranty

		Amadeo software package • *dicomPACS®DX.R* Console Software (SW1000) Professional acquisition software for the connection and control of a direct radiography detector with an up to date graphic user interface, intuitive operation via touchscreen and an adaptable organ specific image processing. It also includes a diagnostic module standard and the multimedia radiographic positioning guide • *dicomPACS®DX.R* Generator Control (SW1001) Transfer of set X-ray values for the exposure to the generator (for already integrated generators) • *dicomPACS®DX.R* DICOM Send SCU (SW1002) Automatic distribution of images to one DICOM recipient, e.g. PACS, including DICOM Storage Commitment and DICOM MPPS functionality • *dicomPACS®DX.R* DICOM Worklist SCU + *dicomPACS®* Connect (SW1003) Query of a DICOM Worklist (SCU) (SW1003) Connection to management systems via BDT/GDT or special OR .INI files (SW1004) • *dicomPACS®DX.R* DICOM Patient CD (SW1008) Creates patient CDs with images in a DICOM structure and a free of charge viewing software • *dicomPACS®DX.R* Cognition Optimised Processing (SW1011) Advanced image processing. Optimal contrast control throughout the entire image for improved detail visibility of soft tissue and bone, including extensive customisation options.
1	AM2102	**Carrying box PVC for Amadeo M5DR / M5DRw** 
1	XA0230	**Protection box for 14" x 17" detectors**  • Enclosure with transport handle for 14" x 17" detectors. For the use with the following detectors: • Toshiba FDX 3543RP, FDX 3543RPW • Konica Minolta AeroDR 1417HQ • Thales Pixium 3543 EZ • PerkinElmer XRpad 4336

1	XT1220	**Patient table II**  • Light and flexible patient table • Rollers are equipped with block brakes • Patient load max. 150 kg (300 lbs.) • Dimensions L/W/H: 2000/700/760 mm
1	XT1290	**Mat for patient table** 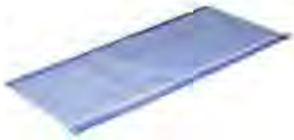 • 2000 mm in length
1	XS2410	**Mobile stand cassette holder for cassette size 35 x 43 cm (14" x 17")** 

1	HC1001	**dicom*PACS*® Diagnostic Workstation 5 Radiology**  • Mini PC • Intel® Processor 3,4 GHz • 8 GB RAM DDR • 2 x 500 GB hard drive, mirrored (RAID 1) • DVD +/- RW drive • 2 x 1000 Mbit network card • Optical mouse and Keyboard, English • MS Windows 7, 64 bit, English • 36 months manufacturers warranty
1	HM0080	**23" Colour Monitor**  23" LCD colour monitor, black or silver/black housing
1	OR1000	**Office laser printer (paper)**
1	N3000	**dicom*PACS*® Basic Package – includes the following components:**  • *dicomPACS*® Diagnostic Module Standard (L1000) Image and patient data management, image optimisation, measurements, processing and marking, import/export, printing on Windows printers for one workstation • *dicomPACS*® DICOM Recipient / Archive (SCP) (N3001) Reception and storage of DICOM images via TCI/IP protocol from an unlimited number of modalities into an SQL database. • *dicomPACS*® Patient CD Module (G2003) Creates patient CDs with images in a DICOM structure and includes a free of charge viewing software • *dicomPACS*® Scan Module (G2011) Connection of film and document scanners via Twain or file interface

1	C1000	**dicom*PACS*® MobileView** iPad and Software  Easy retrieval and review of images on a variety of mobile clients such as tablet PC's (iPad, galaxy etc.) or netbooks, and on regular desktop computers.
2	XZ1000	**X5ray Apron 5 0,50 mm Pb**  X-ray apron made of soft nylon taffeta exterior with a polyurethane coating on the inside and silicone or industrial carbon impregnation. Very good feel and easy to clean. The flexible multi-layer lead rubber material is free of vinyl chloride, PVC and plasticizers. • Lead value: 0.50 mm Pb front, 0.25 mm Pb back • Quality: 180g/m2 • Available lengths: 90, 100, 110, 120, 130 cm, other sizes on request • Available widths (hip): 50, 60, 65, 70, 75 cm, other sizes on request • Closures: Velcro nylon with neoprene coating or belt with snap closure
2	XZ1010	**Thyroid shield 5 0.50 mm Pb** Thyroid protection shield made of a lightweight nylon with velcro fastener. 

1	XZ2210	**Gonadal apron, set of 4 incl. wall mount hanger**  High quality, flexible, lead rubber multi-ply material with outstanding weight distribution in this material category • Lead value: 0.50 mm Pb • Sizes: 25x20 cm, 30x30 cm, 37x40 cm, 40x45 cm • Colour: Ocean (other colors on request) • Including a wall mount hanger
1	XZ2220	**Testicle Protection, set of 2**  Single-layer lead rubber material based on natural rubber with a skin-friendly coating in grey white colour. • Lead value: 1.00 mm Pb • Sizes: Boys (105 x 85 x 55 mm); Men (135 x 105 x 60 mm) • Includes 200 pieces hygiene bags

Philips IntelliVue MP2 Patient Monitor

Specifications:

- B20 ECG, Resp, NBP, SpO2

PHILIPS

MP2/X2 US Army Airworthiness Certification and Evaluation

MP2/X2 certified for the U.S. Army Airworthiness Certification and Evaluation (ACE) program of U.S. Army Aeromedical Research Laboratory (USAARL). Tests performed in accordance with the latest revisions of the following standards:

MIL-STD-461E Electromagnetic interference characteristics requirements and limits.
MIL-STD-810F Department of Defense test method standard for environmental engineering considerations and laboratory tests.
MIL-STD-1472F Human Engineering.
ANSI/AAMI HE48-1993 HF Engineering guidelines & preferred practices for the design of medical devices.
ANSI/AAMI ES1-1993 Safe current limits for electromedical apparatus.

The certification provides confidence in flight safety by ensuring medical equipment used during patient transport does not interfere with flight control, navigation systems, or communications equipment. Having met the U.S. military's rigorous testing and standards affirms the MP2/X2 are rugged enough for most any demanding environment, including emergency medical services, fire, law enforcement and rural and urban communities.

Confidential Patient Monitoring, December 2008

Not just a new ultrasound, a new vision

Philips VISIQ ultrasound

Ultra mobile
Wherever you need to deliver high-quality abdominal ultrasound imaging, whether in traditional or remote locations, VISIQ is the easy choice. It's ready to go whenever and wherever care takes place.

VISIQ's thin, lightweight tablet can be placed on a bedside table to view its exceptional, high-definition images. Its slim, ergonomically designed stand is easy to move quickly from bed to bed, and carrying it from clinic to clinic is a breeze. VISIQ wakes from sleep mode and is ready to start scanning in a few seconds. Weighing just over 1 kg, and with a battery life that supports over 2.5 hours of back-to-back scanning, VISIQ makes on-the-go ultrasound a reality.

Ultra performance
You've come to expect exceptional image quality from Philips ultrasound systems. Don't let size change your expectations. VISIQ taps the power of our passion for ultrasound and decades of expertise to deliver exceptional high quality clinical images that rival those from cart-based systems.

VISIQ's core imaging electronics – the micro beamformer and image optimization module – have been miniaturized and placed in the transducer. Add advanced technologies and intelligent optimization, and the result is cart-based performance in a small form factor that helps you easily and quickly get the high-quality images you need to make your decisions with increased confidence.

Ultra simple
VISIQ is so advanced. It's simple. If you're familiar with smartphones, you'll quickly become comfortable with VISIQ's touchscreen user interface.

This interactive multi-touch ultrasound system delivers just the right features and on-screen controls you need to perform the task at hand – whether it's diagnosing abdominal bleeding or conducting a fetal well-being exam for an expectant mother. With precisely the information you need at your fingertips – nothing more, nothing less – you can make fast, informed decisions, enhance patient care, and increase patient satisfaction.

Not just a new ultrasound,
a new vision

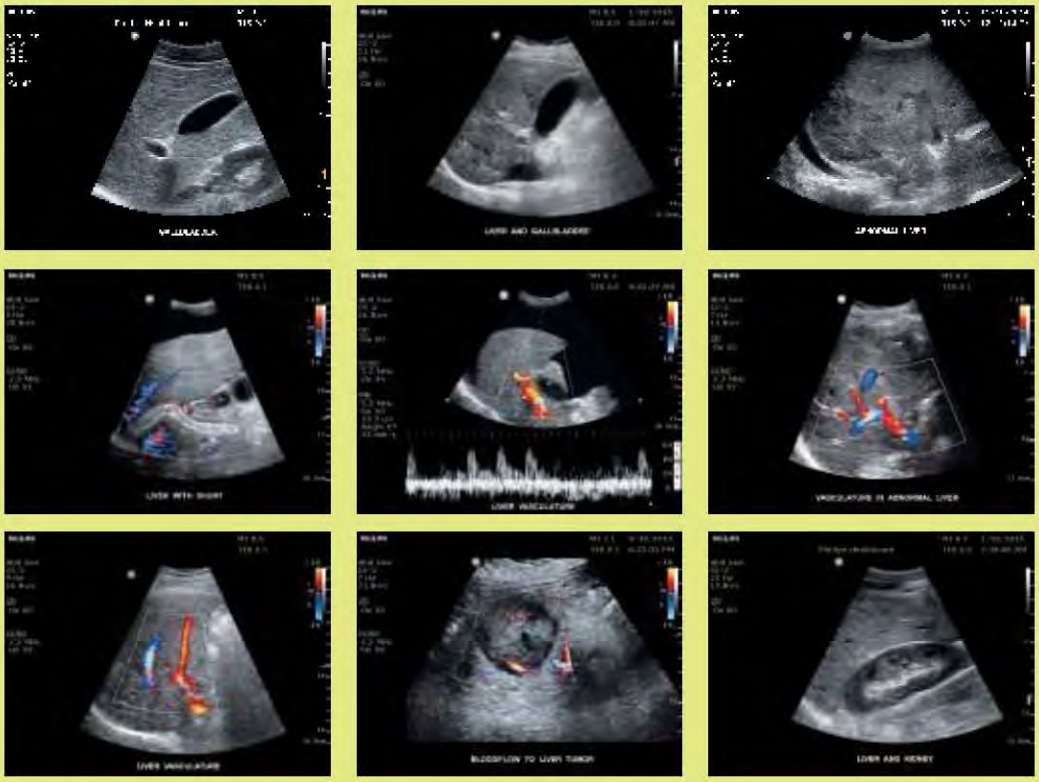

www.philips.com

Please visit www.philips.com/VISIQ

Printed in The Netherlands.
4522 991 11171 * APR 2015

Paediatric and adult ventilator in one unit

diamedica

the market leader in anaesthetic equipment for challenging environments

Oxygen Reservoir
Filling System

Oxygen reservoir filling system and reserve vessel for use with an oxygen concentrator.

Size and empty weights:

Compressor: 42x 23 x 33 cm, 13 kg

20 litre vessel: 25 x 25 x 70 cm, 6 kg

100 litre vessel: 40 x 40 x 105 cm, 13.5 kg

This system enables a pressure vessel to be filled with oxygen providing additional back up oxygen supply to run the Glostavent® anaesthesia machine in the event of power failure and absence of cylinder oxygen, or for direct oxygen supply to patients.

The system will take oxygen from any oxygen concentrator and fill either a 20 litre or 100 litre reserve vessel to a pressure of 5 bar (75 psi) giving 100 or 500 litres of usable oxygen. Multiple vessels can be supplied.

- This can be used in the event of power failure for direct supply to patients
- It can also be used to provide up to 2 hours or 8 hours resepctively of additional back up supply to run the Glostavent® anaesthesia machine in the event of electrical failure and no cylinder oxygen

COMPRESSOR FILLING SYSTEM

- Oil free 12 volt compressor (rated at 10 bar)
- Fitted into a Peli case
- Integral cooling fan
- Internal 12 volt sealed lead acid battery
- 12 volt battery charger / power supply
- Pressure control valve (preset at 5 bar)
- On / off switch, mains power lead
- Supply and filling tubes suitable to connect from oxygen concentrator
- The compressor unit will accept mains power from 95 volts to 290 volts (50Hz - 60Hz)

continued

Oxygen Concentrator optional

Diamedica (UK) Limited, Grange Hill
Industrial Estate, Bratton Fleming, Barnstaple, Devon, EX31 4UH, UK

Tel: +44 (0)1598 710066 Fax: +44 (0)1598 710055
Email: info@diamedica.co.uk www.diamedica.co.uk

PRESSURE VESSEL RESERVOIR

- This system can be supplied with either a 20 litre or 100 litre reservoir vessel set on a wheeled frame (rated to 10 bar)
- Over pressure safety valve (pre-set 7 bar)
- Stainless steel pressure gauge
- Oxygen flowmeter (8 litre/minute)
- Quick release supply fitting and tube

Training and Support

Diamedica's commitment to our customers is:

- To provide, free of charge to all customers, ongoing after sales support via email or telephone for as long as the customer has their equipment
- To provide training for medical and technical personnel to enable them to maximise the potential of the equipment safely and economically

Diamedica (UK) Limited, Grange Hill Industrial Estate,
Bratton Fleming, Barnstaple, Devon, EX31 4UH, UK

Tel: +44 (0)1598 710066 Fax: +44 (0)1598 710055
Email: info@diamedica.co.uk www.diamedica.co.uk

diamedica

the market leader in anaesthetic equipment for challenging environments

Radiation safety inspection
X-Ray container

RAD SUPPORT

Hospitainer
Vlijtseweg 95
7317 AE Apeldoorn, Holland

24 Oktober 2014

Index

Introduction

This report contains a radiation safety inspection for the X-ray containers build by Hospitainer. The container is standard included with a mobile x-ray device. The inspection is done for Hospitainer to determine or to prove if extra shielding material is needed to prevent civilians from being exposed unnecessary and if it is safe for radiographic workers to work in the container.

General information

Used measurement devices

Name	model	calibration date
Radiation meter	Fluke P451	January 2014
Dose meter	Unforse raysafe X2	January 2014

Measurement done by

Name	date
Theo Verkleij	1-10-2014

System configuration

Name	Model	Ser. No.
O&R technology	Amadeo M-DR	1101033

The Amadeo M-DR is a mobile x-ray device.
6 kW HF generator
kV: 40 - 120 kV.
mA: max 110 ma at 50 kV
Tube Focus 1.2 x 1.2 mm

Exposure Parameters during measurements

Name	value
Tube voltage	100 kV
mAs	22,8
Exposure time	0,5 SEC
SID pos A	100 CM
FFA pos B	150 CM
FFA pos C	150 CM
FFA pos D	150 CM
phantom	18 cm PMMA 35 x 35 cm
Exposure field	30x30
Tube position A	Vertical beam
Tube position B	Horizontal beam
Tube position C	Horizontal beam, dose measured in the beam using Unfors X2.
Tube position D	Horizontal beam, dose measured in the beam using Unfors X2.

Calculation of radiation exposures

Estimation of mAs and kV used during examinations over one year.
In this situations is unknown where this container is shipped to and what kind of examinations will be performed. For this reason we choose a number of most common used examinations and retrieved the exposure parameters from the anatomic programs set in the X-ray generator.

Calculated mAs

			KV	mAs
1	hand	wrist	50	4
2	hand	hand	52	2,4
3	hand	finger	50	2
4	arm	humerus	58	3,2
5	arm	elbow	52	4
6	arm	forearm	52	5,6
7	scull	AP	74	4,9
8	scull	PA	64	4,2
9	scull	AXIAL 30	74	4,9
10	chest	THORAX AP	120	4
11	chest	THORAX PA	74	1,4
12	chest	shoulder	72	3,5
13	abdomen PA		78	6,3
14	abdomen AP		78	6,3
15	pelvis AP		82	6,4
16	pelvis	hip joint	82	3,6
17	leg	upper leg	68	2,1
18	leg	knee	62	3,5
19	leg	lower leg	62	2,8
20	foot	ankle	56	6
21	foot	calcaneus	54	6
22	foot	foot	56	4
		summary	1470	91,1
		average	**66,81 kV**	**4,14 mAs**

Calculated patients

every 15 minutes a patient =	4 per hour
8 hours a day =	32 patients per day
260 working days per year =	8320 patients per year

Calculated mAs / year

mAs per year = average mAs * patients =

mAs per year= 4.15 * 8320 = **34528** mAs / year

Maximum kV is 120, only used for thorax
for measurements we use 100 kV, this is far above the average of 66.

Floor plan x-ray container

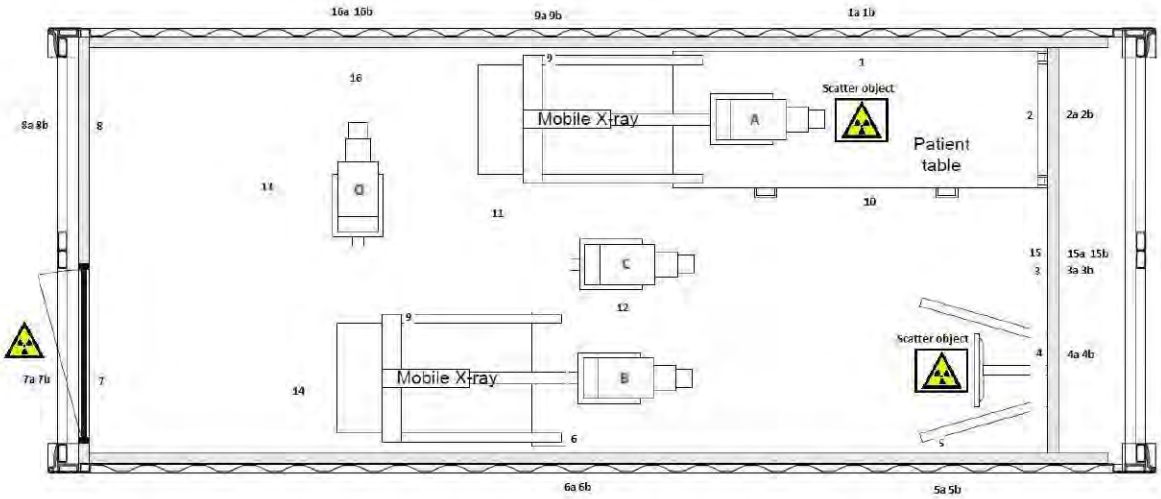

Floor plan

Description of the X-ray container

The container consists of a steel surrounding, steel plate with a thickness of 1.6 to 2 mm. In the front and the back end are doors situated, constructed out of the same steel plate materials.
Internally the container is constructed out of isolation plates with on both sides steel plate with a thickness of 0.7 mm.

In the container a bucky table and bucky stand is positioned. Exposures on the bucky table will be performed with a vertical x-ray beam.
Exposure on the wall bucky are made in a horizontal position.

Measurements result

Measurements for container shielding

Measurement pos.	X-ray Tube position	Q	Bmes	BJ	Dgem	Dj	correction factor	steal	Calculated dose per year	notes
nr.	nr.	0 - 1	mAs	mAs	uSv	mSv/year		mm	mSv/year	
1	A	1,00	22,8	34528	9,4	14,2352				40 cm
1*	A						0,0167	6,0	**0,24**	
1a	A	1,00	22,8	34528	0,33	**0,4997**		3,0		
1b	A						0,0455	3,0	**0,6481**	
2	A	1,00	22,8	34528	2	3,0288				110 cm
2a	A	1,00	22,8	34528	0,156	**0,2362**		1,4		
2b	A						0,1600	1,4	**0,4846**	
3	B	1,00	22,8	34528	0,325	0,4922				100 cm
3a	B	1,00	22,8	34528	0,1	**0,1514**				
3b	B						0,1600	1,4	**0,0787**	
4	B	1,00	22,8	34528	0,1	0,1514				100 cm
4a	B	1,00	22,8	34528	NM					
4b	B						0,1600	1,4	**0,0242**	
5	B	1,00	22,8	34528	4,28	6,4816				40 cm
5a	B	1,00	22,8	34528	0,075	**0,1136**				
5b	B						0,0455	1,4	**0,2951**	
6	B	1,00	22,8	34528	1,8	2,7259				180 cm
6a	B	1,00	22,8	34528	NM					
6b	B						0,0455	1,4	**0,1241**	
7	B	1,00	22,8	34528	0,2	0,3029				420
7a	B	1,00	22,8	34528	NM					GLAS
7b	B						0,5000	0,9	**0,1514**	GLAS 9mm
8	A	1,00	22,8	34528	0,25	0,3786				390 cm
8a	A	1,00	22,8	34528	NM					
8b	A						0,0455	3,0	**0,0172**	
9	A	1,00	22,8	34528	1,25	1,8930				150 cm
9a	A	1,00	22,8	34528	NM					
9b	A						0,0455	3,0	**0,0862**	

1* calculation in case of a container with patient bed is positioned next to the x-ray container, total amount of steal is 6 mm

Measurements for X-ray workers

Measurement pos.	X-ray Tube position	Q	Bmes	BJ	Dgem	Dj	Notes
nr.		0 - 1	mAs	mAs	uSv	mSv/year	
10	A	1,00	22,8	34528	3	4,5432	80 cm
11*	**A**	**0,50**	**22,8**	**34528**	**1**	**0,7572**	**170 cm**
11	A	1,00	22,8	34528	1	0,7572	170 cm
12	B	1,00	22,8	34528	1,4	2,1201	180 cm
13	A	1,00	22,8	34528	0,25	0,3786	320 cm
14*	**B**	**0,50**	**22,8**	**34528**	**0,4**	**0,3029**	**320 cm**
14	B	1,00	22,8	34528	0,4	0,3029	320 cm

*Used for dose calculation, see conclusion.

Measurements for transmission of the direct bundle

Measurement pos.	X-ray Tube position	Q	Bmes	BJ	Dgem	Dj	correction factor	steal	Calculated dose per year	Notes
nr.	nr.	0 - 1	mAs	mAs	uSv	mSv/year		mm	mSv/year	
15	C	0,05	22,8	34528	184,8	13,9929				UNFORS
15a	C	0,05	22,8	34528	21,71	1,6439				UNFORS
15b	C						0,1600	1,4	2,24	260CM
16	D	1,00	5,4	34528	991,6	6340,3639				
16a	D	1,00	5,4	34528	34,68	221,7465				
16b	D						0,0455	3,0	288,66	260CM

measurement pos.	position of the meter during the measurement.
X-ray tube position	Position of the x-ray source during the measurement.
Q	Presence factor (people being present on this position during the year)
Bmet	mAs during exposure.
BJ	mAs per year.
Dgem	Measured dose.
Dj	Measured dose per year.
correction factor	for radiation transmission calculation, see Transmission factors
mm steal	amount of steal in mm corresponding to the correction factor
calculated dose	behind the steel wall

NM: not measurable

Formula for Calculated year dose

Values for *b are calculated from measurement inside the cabin In this calculation we use distance of null millimeters from 1 to 1b. In fact it is about 20 cm.

Calculated value = Dose per year x Correction factor.

Example calculation for position 1b
Calculated value = 14,2352 x 0,0455 = **0,6481 mSv/year**

Formula for measured year dose

Q	Presence factor (people being present on this position during the year)
Bmet	mAs during exposure.
BJ	mAs per year.
Dgem	Measured dose.
Dj	Measured dose per year

$$Dj = \frac{Q * BJ * Dgem}{(Bmet * 1000)}$$

Dose limits according Dutch regulations

1 mSv/year for citizens
1 -6 mSv/year for X-ray workers category B
6 - 20 mSv/year for X-ray workers category A

Outside the container on 10 cm from the wall, should not exceed 1 mSv/year
Outside of terrain boundary 0,01 mSv/year should not be exceeded. MID < 0,01 mSv/year.

Terrain boundary calculation.

Terrain Boundary is calculated from point 1a

ID	Individual dose
H*max	Measured dose at R1 (point 1a from table)
R1	Distance to x-ray scatter source
R2	Distance to x-ray scatter source from terrain boundary
T1	transmission factor 1
T2	transmission factor 2

(1 in case of no shielding materials)

$$ID = H^*max \cdot \left(\frac{R1^2}{R2^2}\right) \cdot T1 \cdot T2$$

H*max	R1	R2	T1	T2	ID dosis terreingrens in µSv/jaar
499	1	3,5	1	1	40,73469388

MID, multifunctional individual dose
MID = ID * 0,25
MID = 10,18367347 uSv/jaar

MID < 0,01 mSv/jaar

The container should be positioned at minimum distance of 3.5 meters from terrain boundary.

Transmission factors

	mm steal				
kV	1	2	3	4	5
70	0,077394	0,019515	0,006759	0,002699	0,001163
80	0,117339	0,039119	0,017215	0,008597	0,004604
90	0,159025	0,061732	0,0306	0,016984	0,010042
100	0,200787	0,085664	0,045527	0,026845	0,016793
120	0,279418	0,137377	0,081387	0,052907	0,036335

source: Archer

Conclusion

In the Measurements for X-ray workers we can see that a dose of 4.5 mSv/year can be reached being at position 10 during al examinations if only exposures are made on the bucky table. This is not realistic. We can foresee that the operator is always behind the console at position 11 for table bucky exposures and at position 14 for wall bucky exposures.
Assuming 50% of the exposures are made on table bucky and 50% on the Wall, the presence factor is 0,5 and the summary of 11 and 14 is 1.055 mSv/year.
X ray workers should always work according to the ALARA principle, wear protective clothing and follow the work instructions in appendix 1.

The table "Measurements for container shielding", shows that the calculated and measured values outside of the container do not exceed 1 mSv per year. Extra shielding is not required.

In "Measurements for transmission of the direct bundle".
First looking at point 3b, if the bundle is positioned properly on the detector, the calculated dose is very low, 0.0787 mSv/year.
At point 15, if 50% is exposed on the wall bucky and 10% of these exposures is not properly aligned on the Bucky, the presence factor is 0.05. This result in a calculated dose of 2.24 mSv/year at position 15b. It is therefore recommended to close the container doors at the rear end of the container.

In terrain boundary calculation is calculated that the container should be positioned at minimum distance of 3.5 meters from terrain boundary to meet Dutch regulations.

Hazerswoude Rijndijk, 20 November 2014

Radiation expert: Theo verkleij

Appendix 1: Work instructions:

Working with X-Ray

X-ray radiation is an ionizing radiation. Ionizing radiation can cause damage to cells of the human body. Being exposed to ionizing radiation must therefore be as low as possible. This is also known as the ALARA principle (As Low As Reasonably Achievable).
You should take every possible measure to prevent being exposed or being near the patient being exposed.

Please observe the following rules:

1. **Make sure you will never enter the direct radiation beam with any body part.**
2. **Use protective clothing against the scattered radiation emitted from the patient. (lead apron, lead gloves, thyroid protector).**
3. **Work with the smallest possible beam of radiation, collimate as much as possible in the area of interest and not outside of the detector.**
4. **Keep as much distance as possible to the patient during exposure.**
5. **Avoid double exposures through proper working procedures**

General:

1. **All people in the X-ray container should wear protective clothing.**
2. **All other people should leave the container.**
3. **Make sure the door is closed an nobody can enter unexpectedly.**

Terms and Conditions of the Metaalunie
1 January 2019

General Terms and Conditions issued by Koninklijke Metaalunie (the employers' organisation for small and medium-sized enterprises in the metal industry) referred to as TERMS AND CONDITIONS OF THE METAALUNIE, filed with the Registry of the Court of Rotterdam on 1 January 2019.
Publication of the Koninklijke Metaalunie, P.O. Box 2600, 3430 GA, Nieuwegein.

Article 1: Scope of application

1.1. These Terms and Conditions apply to all offers made by a Metaalunie member, to all agreements that it enters into and to all agreements arising from this, all of which insofar as the Metaalunie member is the supplier or the contractor.

1.2. Metaalunie members who apply these Terms and Conditions are referred to as the Contractor. The other party is referred to as the Client.

1.3. In the event of conflicts between the agreement entered into by the Client and the Contractor and these Terms and Conditions, the provisions of the agreement will prevail.

1.4. These Terms and Conditions may only be applied by Metaalunie members.

Article 2: Offers

2.1. All offers are without obligation. The Contractor is entitled to revoke its offer up to two working days after it has received the acceptance.

2.2. If the Client provides the Contractor with information, the Contractor may assume that it is accurate and complete and will base its offer on this information.

2.3. The prices stated in the offer are denominated in euros, excluding VAT and other government levies or taxes. The prices do not include travel, accommodation, packaging, storage and transport costs, nor do they include costs for loading, unloading and cooperating with customs formalities.

Article 3: Confidentiality

3.1. All information provided to the Client by or on behalf of the Contractor, such as offers, designs, images, drawings and know-how, of whatever nature and in whatever form are confidential, and the Client will not use it for any purpose other than for the implementation of the agreement.

3.2. The Client will not disclose or reproduce the information referred to in paragraph 1 of this article.

3.3. If the Client infringes one of the obligations referred to in paragraphs 1 and 2 of this article, it will owe an immediately payable penalty of 1 25,000 for each infringement. This penalty can be claimed in addition to compensation by virtue of the law.

3.4. The Client must return or destroy the information referred to in paragraph 1 of this article immediately on request, within a period set at the discretion of the Contractor. If this provision is infringed, the Client will owe the Contractor an immediately payable penalty of 1 1,000 per day. This penalty can be claimed in addition to compensation by virtue of the law.

Article 4: Advice and information provided

4.1. The Client cannot derive any rights from advice and information provided by the Contractor that is not directly related to the contract.

4.2. If the Client provides the Contractor with information, the Contractor may assume that it is accurate and complete when implementing the agreement.

4.3. The Client indemnifies the Contractor against any third-party claims related to the use of advice, drawings, calculations, designs, materials, brands, samples, models and the like provided by or on behalf of the Client. The Client will compensate the Contractor for all damage suffered by the Contractor, including all costs incurred for defence against these claims.

Article 5: Delivery time/implementation period

5.1. Delivery times or implementation periods specified are indicative.

5.2. The delivery time or implementation period only commences once an agreement has been reached on all commercial and technical details, once all the information, including final and approved drawings and the like, is in the possession of the Contractor, the agreed payment (or instalment) has been received, and the other conditions for the contract have been met.

5.3. If:

a. there are circumstances other than those known to the Contractor at the time it set the delivery period or implementation period, the delivery period or implementation period may be extended by the time the Contractor needs – taking into account its planning – to implement the contract under these circumstances;
b. there are contract extras, the delivery period or implementation period may be extended by the time the Contractor needs – taking into account its planning – to have the materials and parts delivered and to carry out the contract extras;
c. the Contractor suspends its obligations, the delivery period or implementation period may be extended by the time the Contractor needs – taking into account its planning – to implement the contract after the reason for the suspension no longer applies.

Unless the Client has evidence to the contrary, the duration of the extension of the delivery period or implementation period is presumed to be necessary and to be the result of a situation as referred to above in a to c.

5.4. The Client is obliged to pay all costs that the Contractor incurs or damages that the Contractor suffers as a result of a delay in the delivery or implementation period as stated in paragraph 3 of this article.

5.5. Under no circumstances does exceeding the agreed delivery or implementation period give the Client the right to compensation or to terminate the agreement. The Client indemnifies the Contractor against any third-party claims due to exceeding the delivery or implementation period.

koninklijke metaalunie

Article 6: Delivery and risk transfer

6.1. Delivery takes place when the Contractor, at its business location, makes the good available to the Client and has informed the Client that the good is at its disposal. From that time onwards, the Client bears the risk of the good in terms of storage, loading, transport and unloading among others.

6.2. The Client and the Contractor may agree that the Contractor will be responsible for the transport. In that case too, the Client bears the risk of, inter alia, storage, loading, transport and unloading. The Client can insure itself against these risks.

6.3. If a good is exchanged and the Client retains the good to be exchanged pending delivery of the new good, the risk of the good to be exchanged remains with the Client until the time that it hands over the good to the Contractor. If the Client is unable to deliver the good to be exchanged in the condition in which it was when the agreement was concluded, the Contractor may terminate the agreement.

Article 7: Price changes

The Contractor may pass on to the Client an increase in cost-determining factors that occurs after entering into the agreement. The Client is obliged to pay the price increase immediately on the Contractor's request.

Article 8: Force majeure

8.1. If the Contractor fails to fulfil its obligations, this cannot be attributed to the Contractor if this failure is due to force majeure.

8.2. Force majeure includes, inter alia, if third parties engaged by the Contractor – such as suppliers, subcontractors and transporters, or other parties that the Client is dependent on – do not meet their obligations at all or on time, or circumstances due to weather conditions, natural disasters, terrorism, cybercrime, disruption of digital infrastructure, fire, power failures, loss, theft or loss of tools, materials or information, roadblocks, strikes or work interruptions and import or trade restrictions.

8.3. The Contractor is entitled to suspend fulfilment of its obligations if it is temporarily prevented from fulfilling its obligations to the Client due to force majeure. Once the force majeure circumstances no longer apply, the Contractor will fulfil its obligations as soon as its planning permits.

8.4. If it concerns force majeure and fulfilment is or becomes permanently impossible, or the temporary force majeure circumstances have lasted for more than six months, the Contractor is entitled to terminate the agreement with immediate effect either entirely or in part. In those cases, the Client is entitled to terminate the agreement with immediate effect, but only for that part of the obligations that the Contractor has not yet fulfilled.

8.5. The parties are not entitled to compensation for the damages suffered or to be suffered as a result of the force majeure, suspension or termination as referred to in this article.

Article 9: Scope of the work

9.1. The Client must ensure that all licences, exemptions and other decisions that are necessary to carry out the work are obtained in good time. The Client is [illegible]d to send the Contractor a copy of the aforementioned documents im[illegible] on the Contractor's request.

[illegible] in writing, the work does not include:
[illegible] ting, breaking, foundation work, masonry, [illegible] ering, repair work or other con[illegible]
[illegible] ther infrastruc[illegible]

d. removing equipment, building materials or waste;
e. vertical and horizontal transport.

Article 10: Contract extras

10.1. Changes in the work will in any event lead to contract extras if:
a. it concerns changes in the design, the specifications or the contract documents;
b. the information provided by the Client does not correspond with reality;
c. the estimated quantities deviate by more than 5%.

10.2. Contract extras are calculated on the basis of the price-determining factors that apply at the time the extra work is performed. The Client is obliged to pay the price for the contract extras immediately on the Contractor's request.

Article 11: Implementation of the work

11.1. The Client will ensure that the Contractor can carry out its work undisturbed and at the agreed time and that it is given the necessary facilities for the implementation of its work, such as:
a. gas, water, electricity and internet;
b. heating;
c. lockable dry storage space;
d. the facilities prescribed under the Dutch Working Conditions Act [Arbowet].

11.2. The Client bears the risk and is liable for damage to and theft or loss of goods belonging to the Contractor, Client and third parties, such as tools, material or equipment intended for the work or used for the work, located at or near the place where the work is carried out or at another agreed location.

11.3. Notwithstanding the provisions in paragraph 2 of this article, the Client is obliged to take out adequate insurance against the risks referred to in that paragraph. In addition, the Client must take out insurance for the risk of work-related damage with regard to the equipment to be used. The Client must send the Contractor a copy of the relevant insurance(s) and proof of payment of the premium immediately on request. In the event of damages, the Client is obliged to report this immediately to its insurer for further processing and settlement.

Article 12: Delivery of the work

12.1. The work is considered to be delivered in the following cases:
a. once the Client has approved the work;
b. if the Client has put the work into operation. If the Client puts part of the work into operation, then that part is considered to have been delivered;
c. if the Contractor has notified the Client in writing that the work has been completed, and the Client fails to inform the Contractor in writing that the work has not been approved within 14 days of the day of the notification;
d. if the Client does not approve the work on the grounds of minor defects or missing parts that can be repaired or delivered within 30 days and that do not hinder the commissioning of the work.

12.2. If the Client does not approve the work, it is obliged to inform the Contractor of this in writing, stating the reasons. The Client must give the Contractor the opportunity to deliver the work at a later date.

12.3. The Client indemnifies the Contractor against third-party claims concerning damage to parts of the work not delivered due to the use of parts of the work that have already been delivered.

Article 13: Liability

13.1. In the event of an attributable failure, the Contractor is still obliged to fulfil its contractual obligations, with due observance of Article 14.

13.2. The Contractor's obligation to compensate damages – regardless of the [illegible] is limited to the damage against which the Contractor is covered

under an insurance policy taken out by it or on its behalf. However, the scope of this obligation is never greater than the amount paid out under this insurance in the case in question.

13.3. If, for whatever reason, the Contractor does not have the right to invoke paragraph 2 of this article, the obligation to compensate damage is limited to a maximum of 15% of the total contract amount (excluding VAT). If the agreement consists of parts or partial deliveries, this obligation is limited to a maximum of 15% (excluding VAT) of the contract amount for that part or that partial delivery. If it concerns continuing performance contracts, the obligation to compensate damage is limited to a maximum of 15% (excluding VAT) of the contract amount owed over the last twelve months prior to the loss-causing event.

13.4. The following do not qualify for compensation:
a. consequential damages. Consequential damages include inter alia business interruption losses, loss of production, loss of profit, penalties, transport costs and travel and subsistence expenses;
b. damage to property in the care, custody or control of, but not owned by the insured party. Among other things, this damage includes damage caused by or during the performance of the work to goods that are being worked on or to goods that are located in the vicinity of the place where the work is being carried out;
c. damage as a result of intent or wilful recklessness by the Contractor's auxiliary staff or non-managerial subordinates.

The Client can take out insurance for these damages if possible.

13.5. The Contractor is not obliged to compensate damage to material supplied by or on behalf of the Client as a result of improper processing.

13.6. The Client indemnifies the Contractor against all third-party claims due to product liability as a result of a defect in a product that has been delivered by the Client to a third party and of which the products or materials supplied by the Contractor are a part. The Client is obliged to reimburse all the damages suffered by the Contractor in this respect, including the (full) costs of the defence.

Article 14: Guarantee and other claims

14.1. Unless otherwise agreed in writing, the Contractor guarantees the proper execution of the agreed performance for a period of six months after delivery or completion, as detailed in the following paragraphs.

14.2. If the parties have agreed to deviating guarantee conditions, the provisions of this article will remain in full force, unless this is in conflict with those deviating guarantee conditions.

14.3. If the agreed performance has not been executed properly, the Contractor will decide within a reasonable period of time whether it will still perform the work properly or credit the Client for a proportionate part of the contract amount.

14.4. If the Contractor opts to still execute the performance properly, it will determine the manner and time of execution. The Client must in all cases offer the Contractor the opportunity to do so. If the agreed performance (also) included the processing of material provided by the Client, the Client must supply new material at its own expense and risk.

14.5. The Client is responsible for sending parts or materials that are to be repaired or replaced by the Contractor to the Contractor's business location.

14.6. The following are for the Client's account:
a. all transport or shipping costs;
b. costs for dismantling and assembly;
c. travel and subsistence expenses and travel time.

14.7. The Contractor is only obliged to implement the guarantee if the Client has fulfilled all its obligations.

14.8. a. The guarantee does not cover defects that are the result of:
- normal wear and tear;
- improper use;
- lack of maintenance or maintenance carried out incorrectly;
- installation, assembly, modification or repairs carried out by the Client or third parties;
- faulty or unsuitable goods originating from or prescribed by the Client;
- faulty or unsuitable materials or tools used by the Client.

b. No guarantee is given for:
- goods delivered that were not new at the time of delivery;
- inspections and repairs carried out on goods owned by the Client;
- parts that are subject to a manufacturer's guarantee.

14.9. The provisions of paragraphs 3 to 8 of this article apply by analogy to any of the Client's claims based on breach of contract, non-conformity or any other basis whatsoever.

Article 15: Obligation to complain

15.1. The Client no longer has the right to invoke a defective performance if it has not complained to the Contractor in writing within fourteen days after it discovered or should reasonably have discovered the defect.

15.2. The Client must have filed complaints about the invoice with the Contractor in writing and within the payment term, subject to forfeiture of all rights. If the payment term is longer than thirty days, the Client must have filed its complaint in writing within thirty days of the invoice date at the latest.

Article 16: Failure to take possession of goods

16.1. The Client is obliged to take actual possession of the goods that are the subject of the agreement at the agreed location at the end of the delivery or implementation period.

16.2. The Client must cooperate fully and free of charge to enable the Contractor to deliver the goods.

16.3. Goods not taken into possession are stored at the Client's expense and risk.

16.4. If the provisions of paragraph 1 or 2 of this article are infringed, the Client will owe the Contractor a penalty for each infringement of 1 250 per day up to a maximum of 1 25,000, after the Contractor has given notice of default. This penalty can be claimed in addition to compensation by virtue of the law.

Article 17: Payment

17.1. Payment is made at the Contractor's business address or into an account to be designated by the Contractor.

17.2. Unless otherwise agreed, payments must be made within 30 days of the invoice date.

17.3. If the Client fails to fulfil its payment obligation, it is obliged to comply with a request from the Contractor for a tender of payment instead of the agreed amount.

17.4. The Client's right to offset its claims against the Contractor or to suspend the fulfilment of its obligations is excluded, unless the Contractor has been granted a suspension of payments or is bankrupt or the statutory debt adjustment scheme applies to the Contractor.

17.5. Irrespective of whether the Contractor has fully executed the agreed performance, everything that the Client owes or will owe it under the agreement is immediately due and payable if:
a. a payment term has been exceeded;
b. the Client does not fulfil its obligations under Article 16;
c. the Client has filed for bankruptcy or suspension of payments;
d. the Client's goods or claims have been attached;

e. the Client (a company) is dissolved or wound up;
f. the Client (a natural person) files a application to be admitted to the statutory debt adjustment scheme, is placed under a guardianship order or has died.

17.6. If payment is delayed, the Client will owe interest on that sum to the Contractor with effect from the day following the day agreed as the final day of payment up to and including the day on which the Client settles the amount in question. If the parties have not agreed on the final day of payment, the interest is due from 30 days after the sum has become due and payable. The interest is 12% per year, but is equal to the statutory interest if this is higher. For the interest calculation, a part of the month is considered to be a full month. At the end of each year, the amount on which the interest is calculated will be increased by the interest due for that year.

17.7. The Contractor is entitled to offset its debts to the Client against claims that companies affiliated to the Contractor have against the Client. In addition, the Contractor is entitled to offset its claims to the Client against debts that companies affiliated to the Contractor have against the Client. Furthermore, the Contractor is entitled to offset its debts to the Client against claims against companies affiliated to the Client. 'Affiliated companies' means all companies belonging to the same group, within the meaning of Book 2, Section 24b of the Dutch Civil Code, and a participation within the meaning of Book 2, Section 24c of the Dutch Civil Code.

17.8. For late payments, the Client owes the Contractor all extrajudicial costs with a minimum of 1 75.

These costs are calculated on the basis of the following table, i.e., the principal sum plus interest:

on the first	1	3,000	15%
on the excess up to	1	6,000	10%
on the excess up to	1	15,000	8%
on the excess up to	1	60,000	5%
on the excess from	1	60,000 or more	3%

The extrajudicial costs actually incurred are due if they are higher than the calculation given above.

17.9. If judgment is rendered in favour of the Contractor in legal proceedings, either entirely or for the most part, the Client will bear all costs incurred in connection with these proceedings.

Article 18: Securities

18.1. Irrespective of the agreed payment terms, the Client is obliged to provide sufficient security for payment immediately on the Contractor's request and at its discretion. If the Client does not comply with this provision within the set time limit, it will immediately be in default. In that case, the Contractor has the right to terminate the agreement and to recover its damages from the Client.

18.2. The Contractor remains the owner of the delivered goods as long as the Client:
a. has not fulfilled its obligations under any agreement with the Contractor;
b. claims arising from non-fulfilment of the aforementioned agreements, such as damage, penalties, interest and costs, have not been settled.

18.3. As long as the delivered goods are subject to retention of title, the Client may not encumber or dispose of these goods other than in the course of its normal business operations. This provision has effect under property law.

[illegible] Contractor has invoked its retention of title, it may take back the [illegible] The Client will cooperate fully with this.

[illegible] ations after the Contractor has delivered the [illegible] ment, the retention of title with respect to these goods is revived if the Client does not fulfil its obligations under an agreement entered into subsequently.

18.6. The Contractor has a right of pledge and a right of retention on all goods that it has or may receive from the Client on any grounds whatsoever and for all claims that it has or might have against the Client.

Article 19: Intellectual property rights

19.1. The Contractor is considered to be the maker, designer or inventor of the works, models or inventions created in the context of the agreement. The Contractor therefore has the exclusive right to apply for a patent, trademark or model.

19.2. The Contractor will not transfer any intellectual property rights to the Client in the implementation of the agreement.

19.3. If the performance to be delivered by the Contractor (also) includes providing computer software, the source code will not be handed over to the Client. The Client will only acquire a non-exclusive, worldwide and perpetual licence for use for the computer software solely for the purpose of the normal use and proper functioning of the good. The Client is not permitted to transfer the licence or to issue a sub-licence. When the Client sells the good to a third party, the licence transfers by operation of law to the acquirer of the good.

19.4. The Contractor disclaims liability for damages that the Client suffers as a result of an infringement of third-party intellectual property rights. The Client indemnifies the Contractor against any third-party claims related to an infringement of intellectual property rights.

Article 20: Assignment of rights or obligations

The Client may not assign or pledge any rights or obligations pursuant to any article in these General Terms and Conditions or the underlying agreement(s), unless it has the prior written consent of the Contractor. This provision has effect under property law.

Article 21: Cancellation or termination of the agreement

21.1. The Client is not entitled to cancel or terminate the agreement, unless the Contractor agrees to this. If the Contractor agrees, the Client will owe the Contractor an immediately due and payable compensation equal to the agreed price, less the savings for the Contractor as a result of the termination. The compensation will be at least 20% of the agreed price.

21.2. If the price depends on the actual costs to be incurred by the Contractor (on a cost-plus basis), the compensation as referred to in the first paragraph of this article is estimated based on the sum of the costs and labour and the profit that the Contractor would have made for the entire contract.

Article 22: Applicable law and competent court

22.1. Dutch law applies.

22.2. The Vienna Sales Convention (CISG) does not apply, nor does any other international regulation that may be excluded.

22.3. The Dutch civil court with jurisdiction in the Contractor's place of business is authorised to take cognisance of any disputes. The Contractor may deviate from this rule governing jurisdiction and rely on the statutory rules governing jurisdiction instead.

These Terms and Conditions constitute a comprehensive translation of the Dutch version of the Terms and Conditions of the Metaalunie as filed with the Registry of the Court of Rotterdam on 1 January 2019. The Dutch version will prevail in the explanation and interpretation of this text.

AC-M18 AIR CONDITIONER

Function

The AC-M18 Air Conditioner is a transportable unit, developed primarily to provide air conditioning in temporary or transportable buildings or tents. It is a small light weight unit made out of aluminium and built into a rigid steel frame. The unit is designed to be placed outside, with supply air and return air ducted to the tent. For field hospitals where a higher filtration than for normal accommodation is wanted, a dual filtration system for the internal air path is available.

The function of the AC-M18 is based on a cooling circuit and two powerful fans. The evaporator section contains the evaporator and a radial fan, which draws warm internal air of the tent through the cold evaporator and blows out the cooled air through the side or the top of the unit. The condenser section contains two condenser coils and a large axial fan, returning the heat taken from the internal air to the outside atmosphere.

The AC-M18 can be equipped with an electric heating coil, to provide heating for example for night time when temperatures can fall under 20°C.

All sheet metal parts are protected against corrosion by a minimum 80µm top coat.

FEATURES

- Designed for optimal utilisation of a standard 20" ISO container (24 pcs.).
- The AC-M18 is built into a strong metal frame with insulated panels where relevant, powder coated.
- Top finish painting is standard sand colour.
- Designed for air conditioning when the temperature is above 20°C.
  It can provide cooling at ambient temperatures up to +60°C.
  Option with built in heating will heat when ambient temperature is below 20°C.
- Scroll compressor for a high degree of reliability and low noise level.
- Automatic phase surveillance.
- Sequential start of units possible.
- Environment-friendly R134a refrigerant.
- HP/LP pressostat switches ensuring long compressor lifetime.
- Controlled by a room thermostat placed inside the tent (accessory).
- G3 filtration of the internal air.
- Fresh air intake.
- Dual filters in front of internal air intake as an option.
- Four way fork lift handling.
- Easy strap down on air cargo pallets and stackable (two units on top of each other).
- Insulated flexible ducts Ø400 mm for exhaust and return air openings.
- Low voltage control circuit.
- CE-marked.
- ErP 2015 compliant.

ACCESSORIES

- Remote thermostat with 15 m cable and cooling/heating selector switch
- Insulated, flexible duct Ø400x3000 mm incl. storage bag
- Uninsulated flexible duct Ø400x5000 mm incl. storage bag
- Air distribution duct Ø400x6000 mm
- F7 filter
- Trolley with wheels (more detailed description under "Accessories")

TECHNICAL DATA

Air conditioner		**AC-M18**
Nato Stock Number w/o heat	NSN	4120-22-615-5382
Nato Stock Number with 6/16 kW heat and softstarter	NSN	4120-22-616-8876
Operating range, cooling	°C	20-60
Operating range, heating	°C	-32–(+20)
Airflow, internal, with ducts	m^3/h	2500
Airflow, external	m^3/h	5600
Nominal Cooling capacity*	kW/BTU	17,5/60000
Heating capacity optional	kW/BTU	6/16 / 20000/55000
Power supply	V/Hz	3x400 / 50
Power supply plug	type	32A CEE, 3P+N+E 400V, IP44
Max. running current (cooling/heating)	A	16 / 26
Locked rotor amperage (LRA)	A	73
Power consumption (cooling/heating) tested	W	8300 / variable
Refrigerant / quantity	kg	R 134a / 7,8
Filter material	EN 779	G3 + optional
Protection class	IP	X5
Flex. air duct connection	Ømm	400
Noise level, aircon 3m distance, measured in shelter	dB(A)	59
Weight (without accessories), with heat	kg	240

*Performance varies with varying conditions.

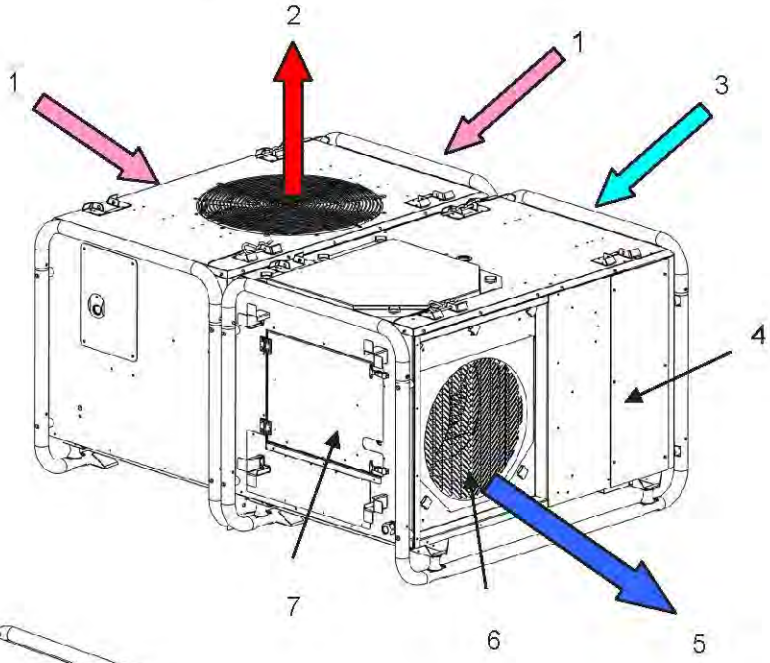

Unit components and airflow

1. Condenser air intake
2. Condenser air discharge
3. Warm air intake
4. Dual filter system (optional)
5. Cooled air discharge
6. Duct coupling (Ø400mm)
7. Electric panel w. cover

DIMENSIONS

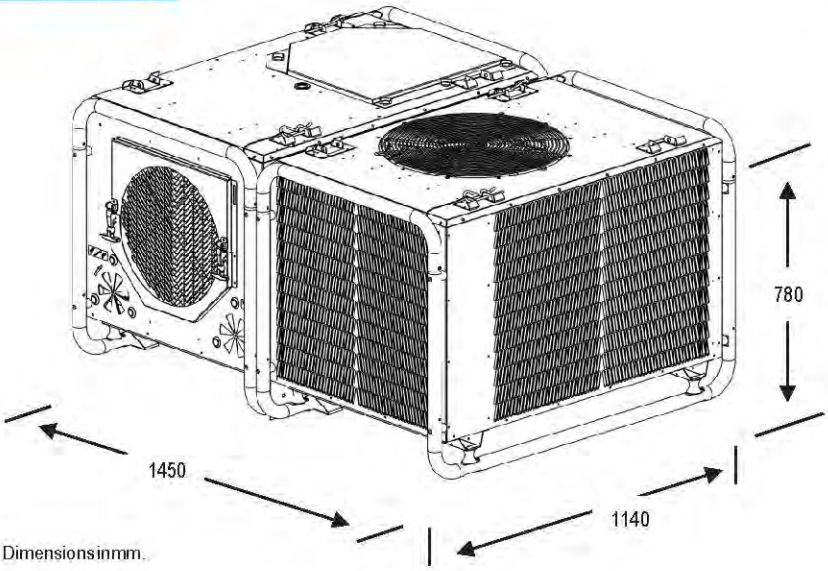

Dimensions in mm.

Power supply plug.