Area Scan Flush Mount Under Vehicle Surveillance System

ASIAN DRAGON
International Corporation

EVERYTHING UNDER THE SUN

Trading Internationally since 1980

Area Scan Flush UVSS

Under Vehicle Security Check Solution

- **flush mount system suitable for scenarios require permanent installation.**

- Suitable for low chassis vehicles like sedan and high chassis vehicles like truck;real-time image uploading;no limitation for vehicle length..
- High solution color image: 4096P color images for both area scan and line scan.
- Dual scan mode: using area scan technology and line scan technology simultaneously to effectively scan and inspect the chassis of vehicles to search and analyze for suspicious objects or contraband such as drugs and weapons.
- The system is ideal for government, military, transportation and corporation facilities requiring security checkpoints for vehicles such as vans, tractor trailers, buses and passenger vehicles.

Specifications

SPV-DM110 Flush Mount Scanner Parameter	
Area scan speed	Forward: 0 ~ 100 km/h, Backword: 0 ~ 25 km/h
Line scan speed	Forward: 0 ~ 20 km/h, Backword: 0 ~ 20 km/h
Height limit	50 ~ 2000 mm
Length limit	No limit
Resolution	> 10000x4096
Load bearing	60 tones(vehicle weight)
Above ground	3 cm
Dimension	1200mm x 300mm x 75mm
Weight	27 kg
Working tempture	-40℃ ~ 70℃
Protection level	IP68
Server Parameter	
Server	CPU: I5; Memory: 4G; HD: 128G+1T
Control Box Parameter	
Vehicle detector	2 channel
External trigger	2 channel
POE	8 ports 10/100/1000M RJ45
ETH	1 port 10/100/1000M RJ45
Scanner connector	1 channel
LPR Camera Parameter	
Sensor	1/2.8 inch CMOS
Resolution	1920x1080
Video codec	H 264, H 265
Capture rate	>99.5%

Flush Mount Model

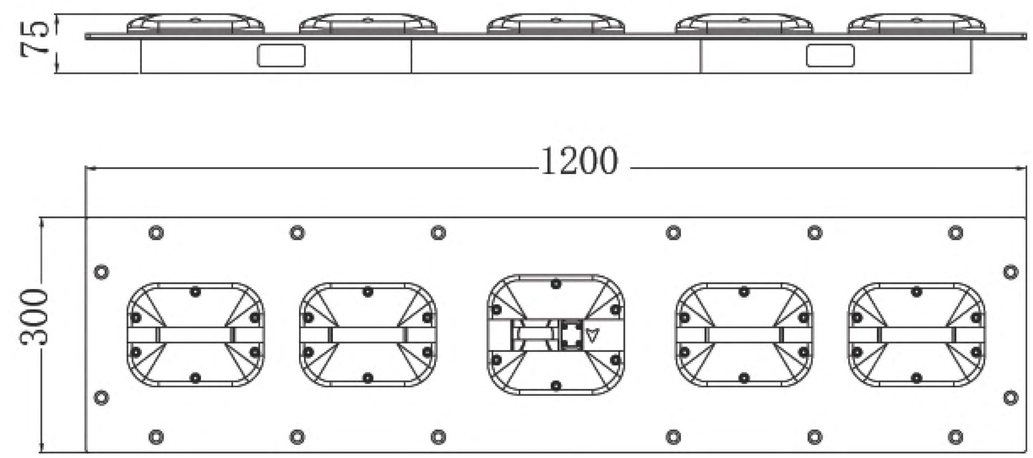

Flush Mount

- Flush mount system adopts ultra slim design, only need to dig into ground for less than 5 cm;
- Easy engineering work, installation will not block road access;
- Support bidirectional scan;
- Area Scan Technology;
- Support scenarios where the vehicle remains stationary on the underbody scanner. The resultant image will not distort or elongate when the vehicle remains parked on the scanner.

Single camera for bidirectional license plate recognition

Detect front plate when vehicle is driving in

Detect rear plate when vehicle is driving out

- Only one LPR required for bi-directional gate;
- Capture and recognize front license plate while vehicle is driving in;
- Capture and recognize rear license plate while vehicle is driving out;

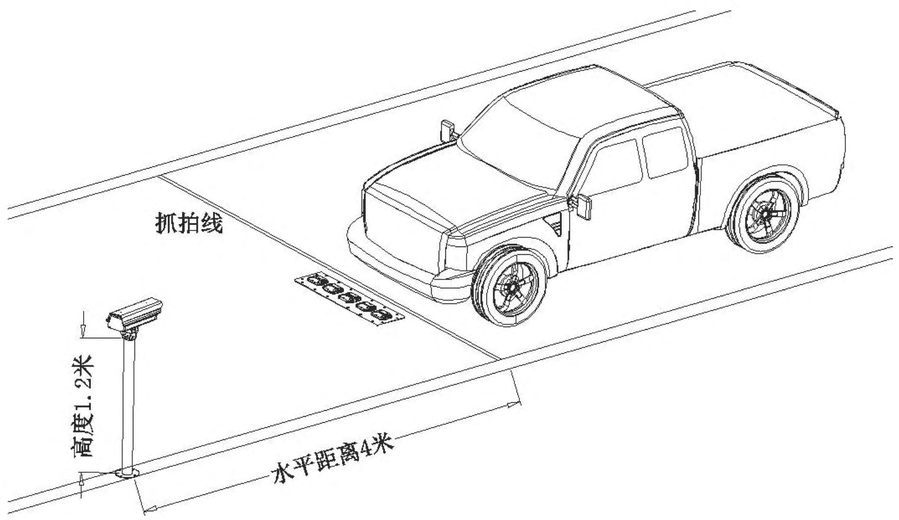

Support High Vehicle Speed

- Support up to 0- 100km/h for flush mount；

Ultra Slim Modularized Design

- Modularized design for all models;
- Ultra slim design for all parts;
- IP68 waterproof for all parts;
- Easy to eliminate fault by replacing with spare parts;
- Working temperature -40℃ ~ 70℃ ;
- Unique surface mount version, similar shape and size as speed bump;

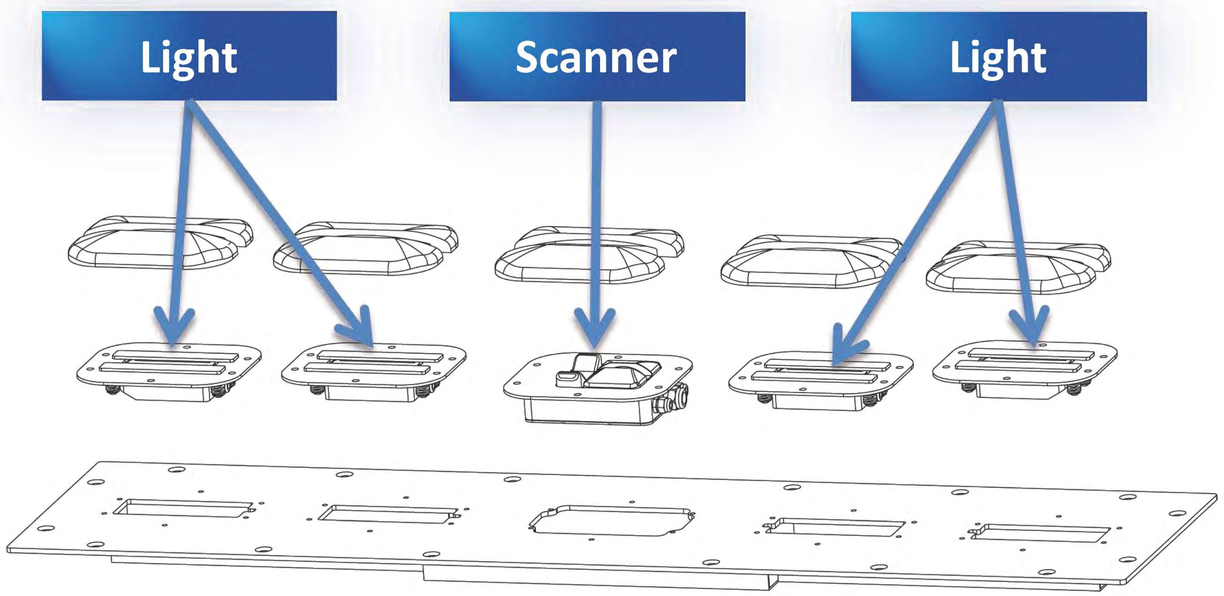

Surface mount

Server Client Architecture

- Server-Client software architecture, with server able to support multiple scanners and multiple clients;
- Software supports multiple levels of user privileges;

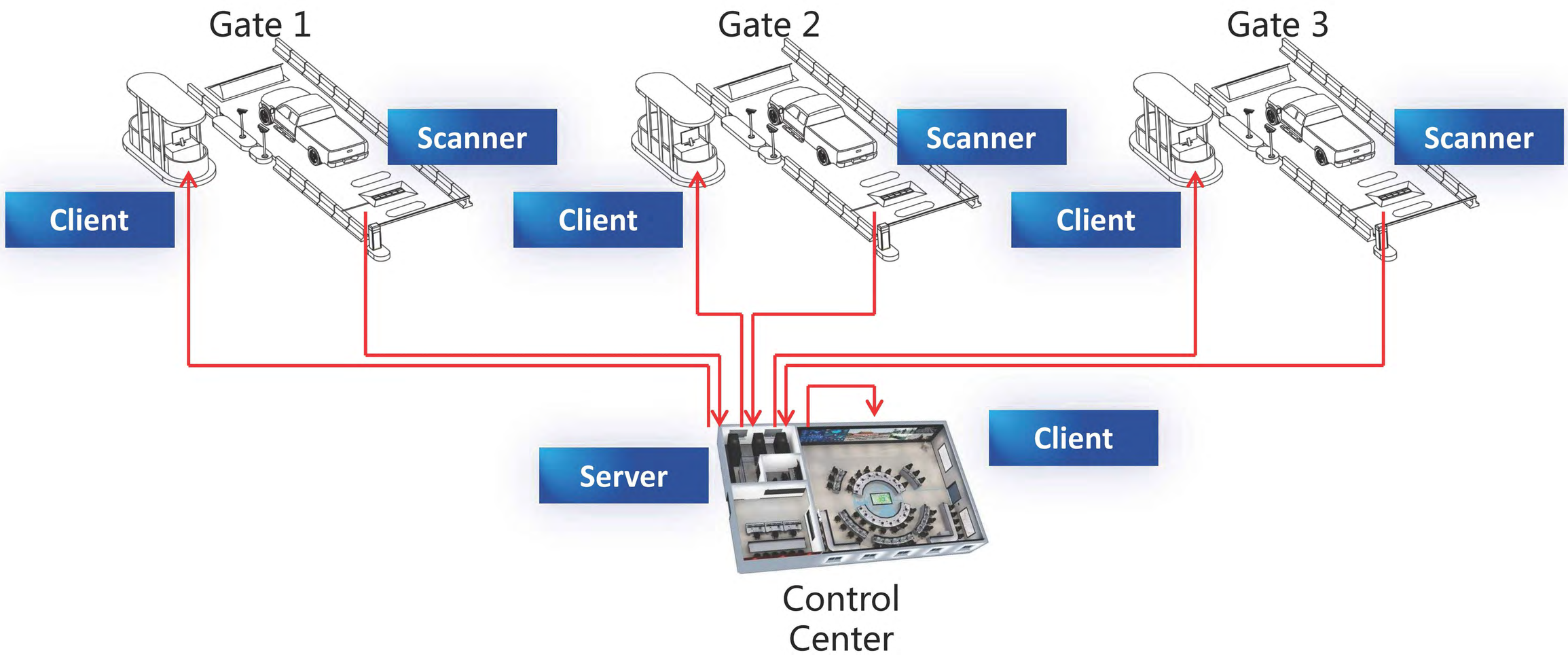

Multiple Detection Method

- Scanner features embedded bidirectional trigger, allowing the system to work without extra trigger;
- Control box features two channel loop sensor detectors, that can connect loop sensor coils directly;
- Control box features two external trigger input ports for external triggers like Radar;

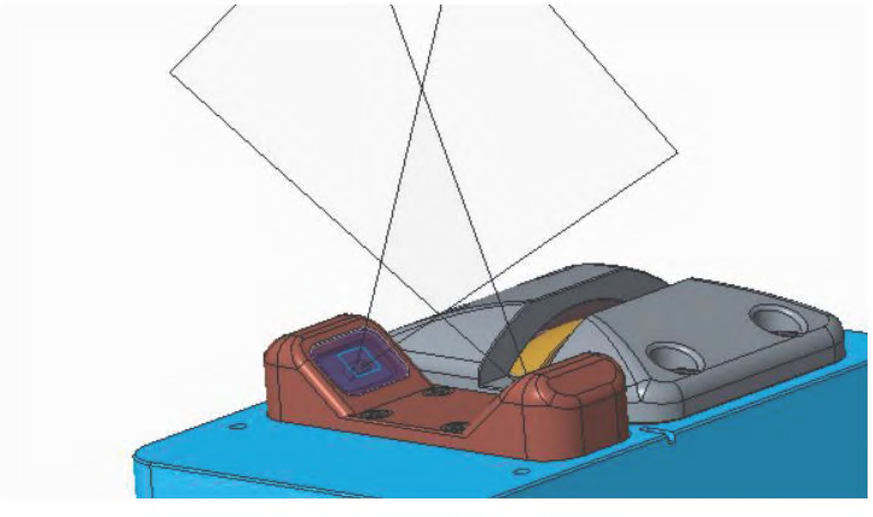

Embedded bidirectional trigger

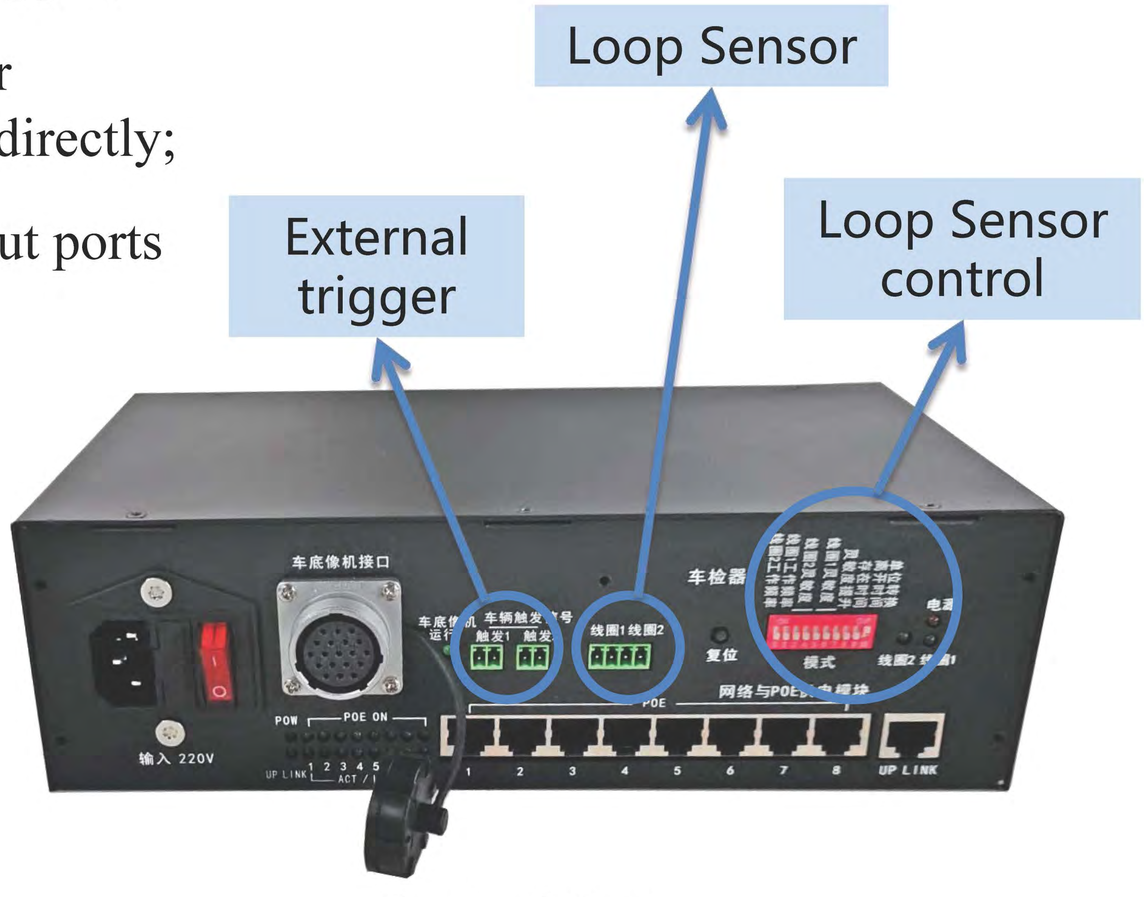

Control Box

Requirements

Terrorist Attack

- Border, Custom office
- Green zone, Check point
- Security check for events

Smuggling

- Border smuggling
- Prison break
- Stealing from factory

Health Check

- Fast vehicle health check
- Record vehicle transportation
- Battery check for electric cars

Advantages

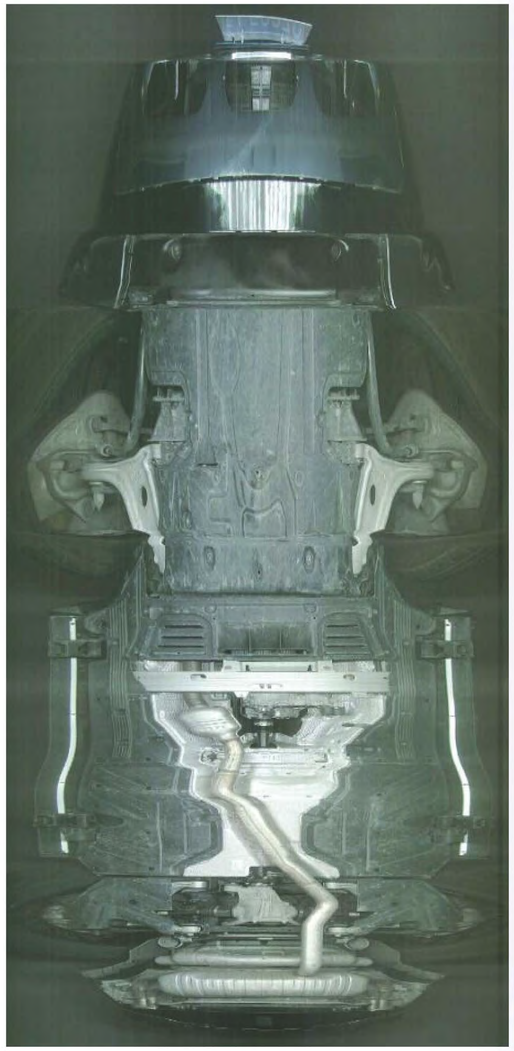

Normal Scan

- Vehicle speed change or stop, image have distortion;
- Can not apply AI algorithm;
- Can not used for BIG DATA;

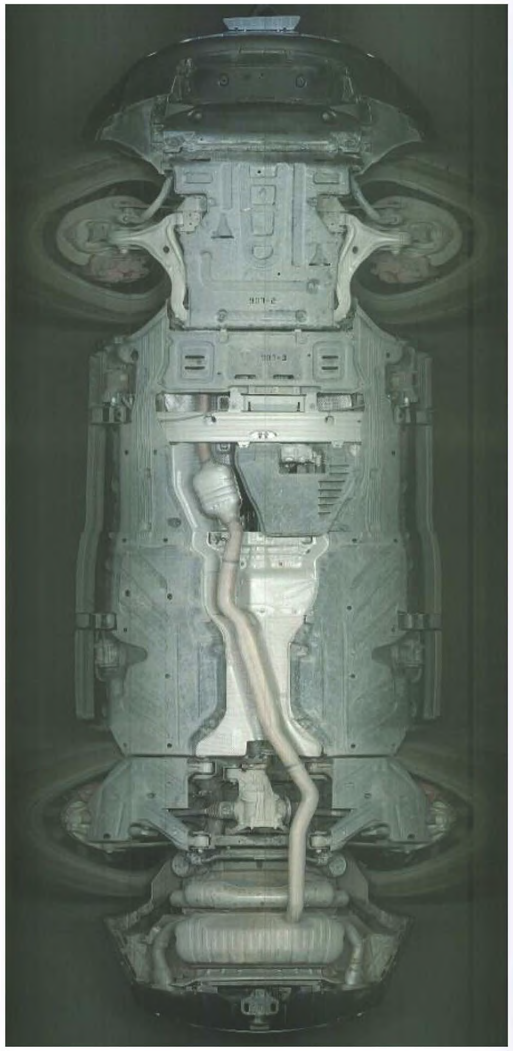

Advanced Technology

- Automatically match vehicle speed;
- Scan result not affected by vehicle speed change;
- Best for AI algorithm;

Imaging is not affected by vehicle speed change

4K Color Imaging

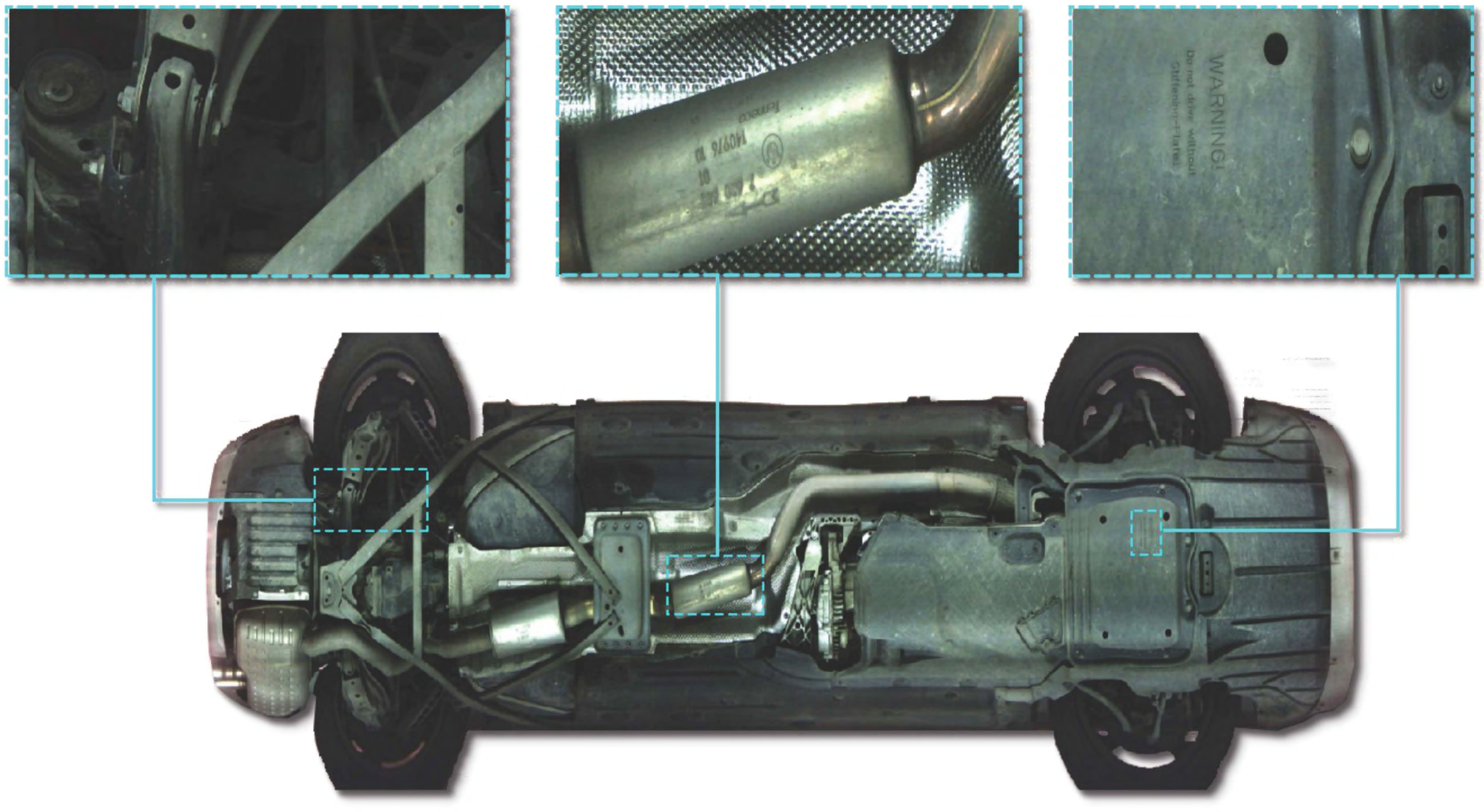

Generate 4096P color images;
Small texts and bolts are shown clearly;

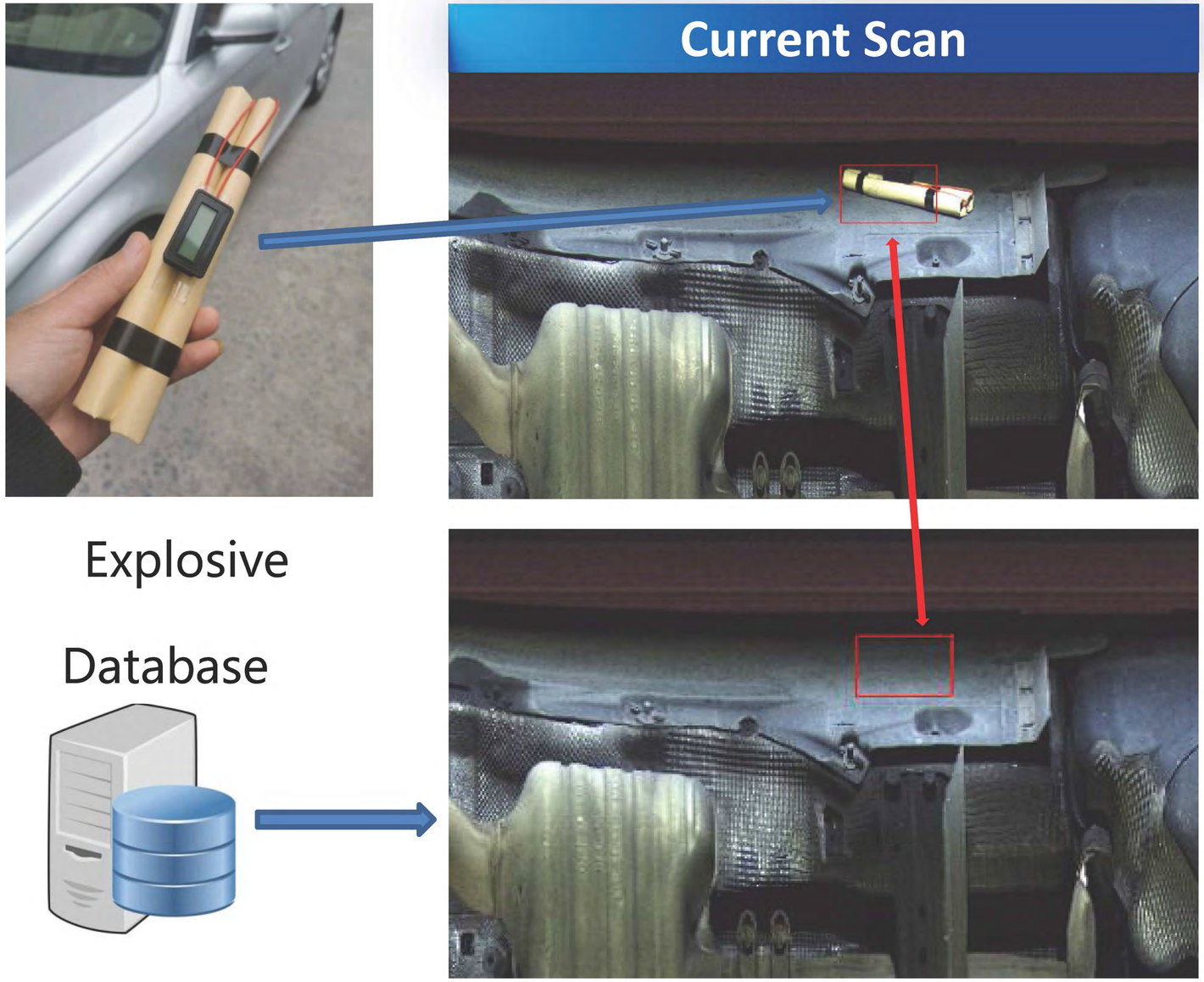

Foreign Object Detection

- Search database for best match chassis to compare with current scan;
- Mark detected foreign object on image and set alarm;
- Database can accumulate automatically by including new scan images after inspection;

Driver Face Detection (option)

- Can detect driver face automatically;
- Can search database for driver information;
- Can setup driver black list, then system can set alarm when driver in black list been detected;

Test Scene

Software GUI

Stainless Steel Protector

- Stainless steel frame and cover, nice appearance;
- Mold stainless steel cover, load-bearing capacity up to 60 tones (vehicle weight);
- All round protection, providing stability and a long service life;